SONY

SCPH-7500 SERIES

SERVICE MANUAL

Japan Model
SCPH-7500

US/Canada Model
SCPH-7501

Australia Model
SCPH-7502A

UK Model
SCPH-7502B

AEP Model
SCPH-7502C

Asian Model
SCPH-7503

3rd Edition

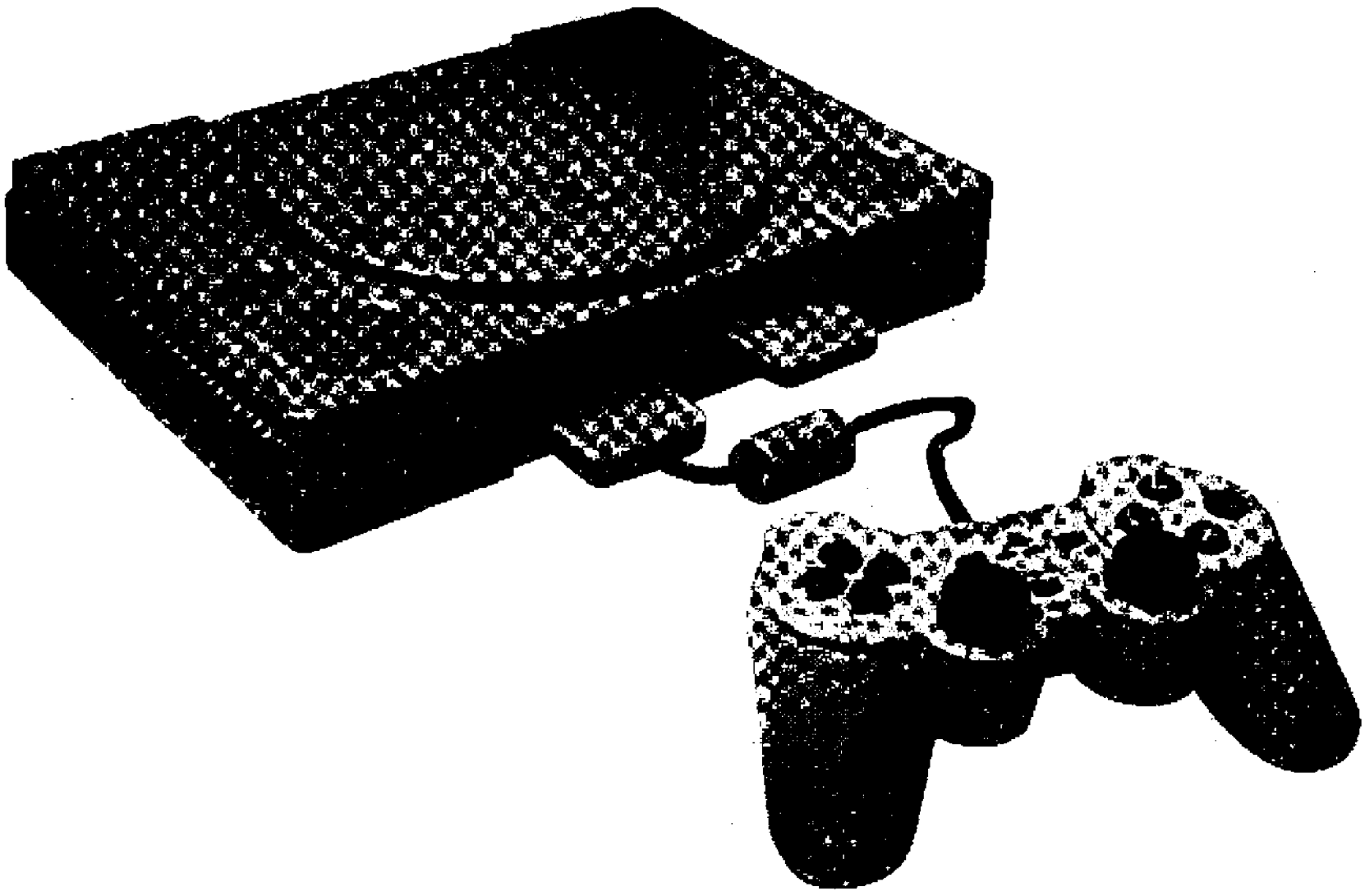

Registered No.

PlayStation

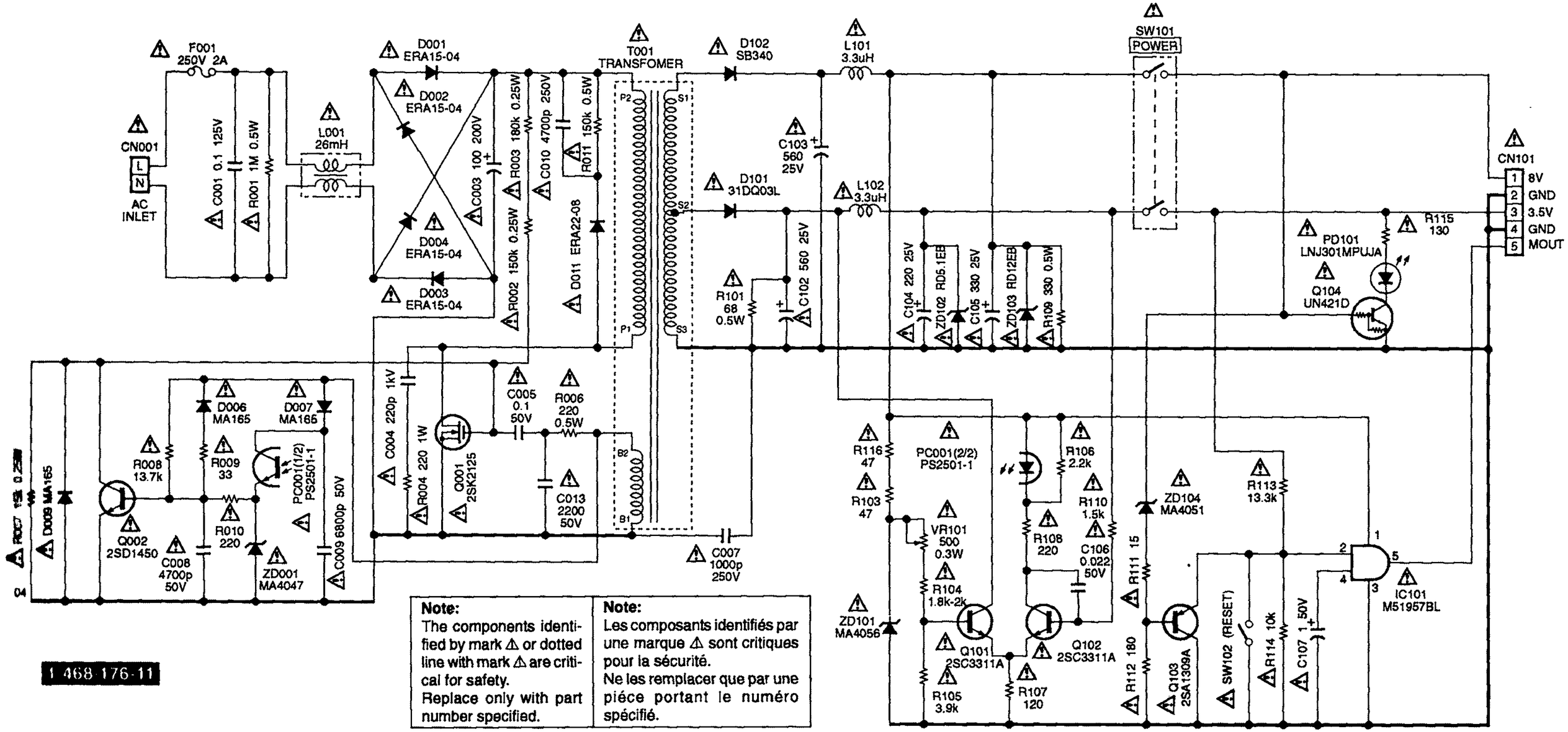

Note:	Note:
The components identified by mark ⚠ or dotted line with mark ⚠ are critical for safety. Replace only with part number specified.	Les composants identifiés par une marque ⚠ sont critiques pour la sécurité. Ne les remplacer que par une piéce portant le numéro spécifié.

1-468-176-11

6-9. PRINTED WIRING BOARD (POWER BLOCK (1-468-176-11))

POWER BLOCK (SCPH-7500)

SECTION 5
BLOCK DIAGRAMS

5-1. OVERALL BLOCK DIAGRAM

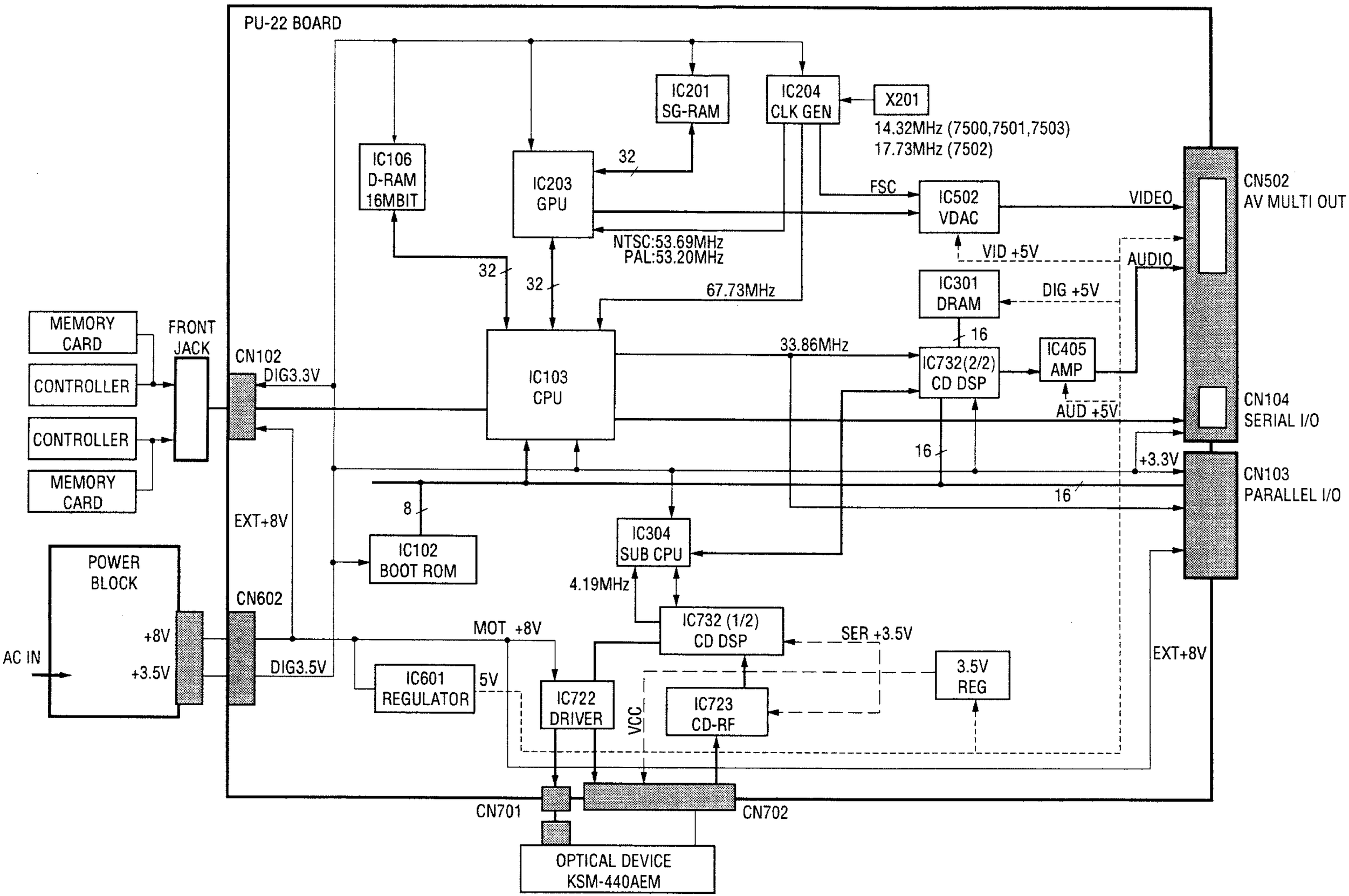

5-2. CPU BLOCK DIAGRAM

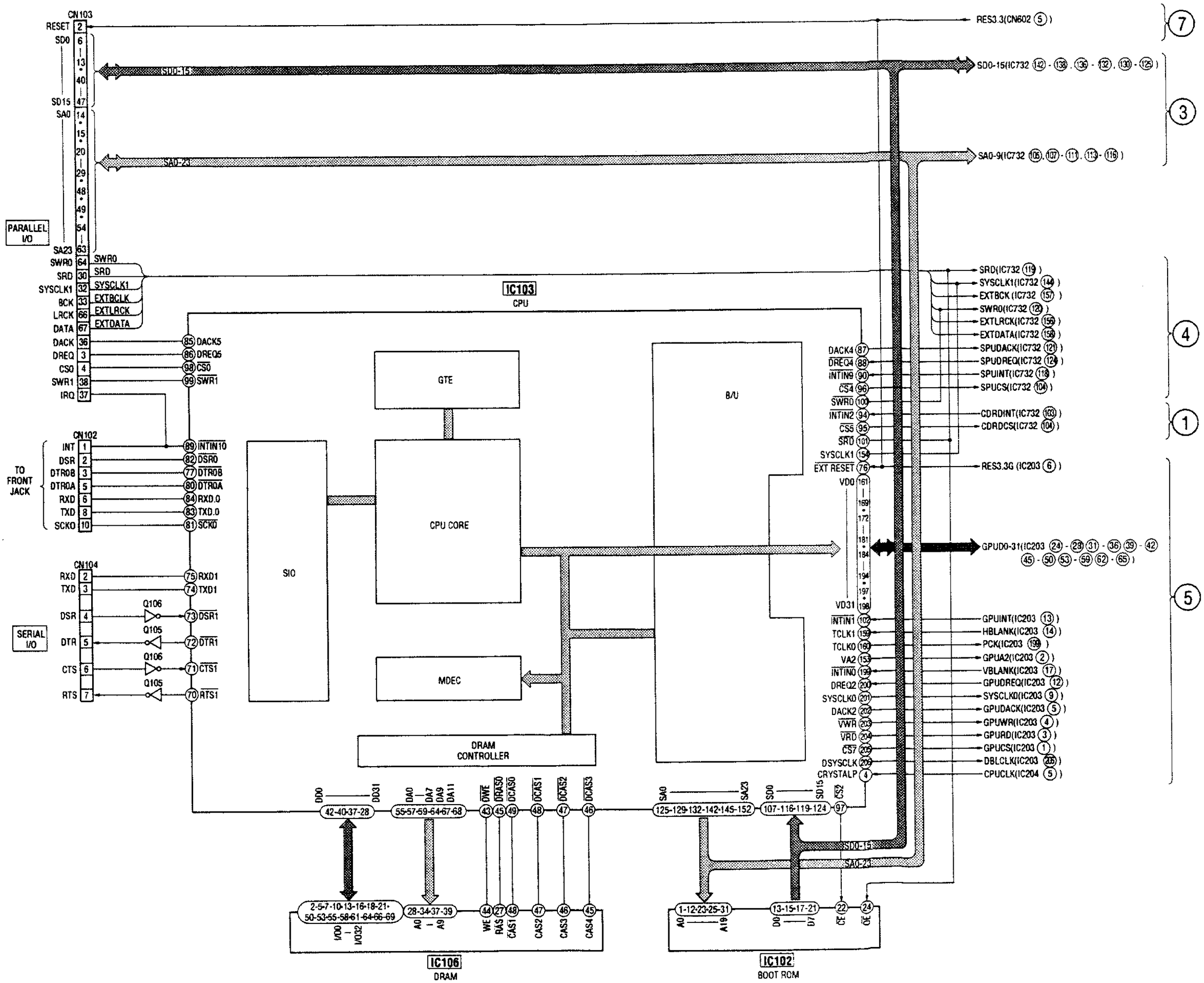

-3. VIDEO BLOCK DIAGRAM

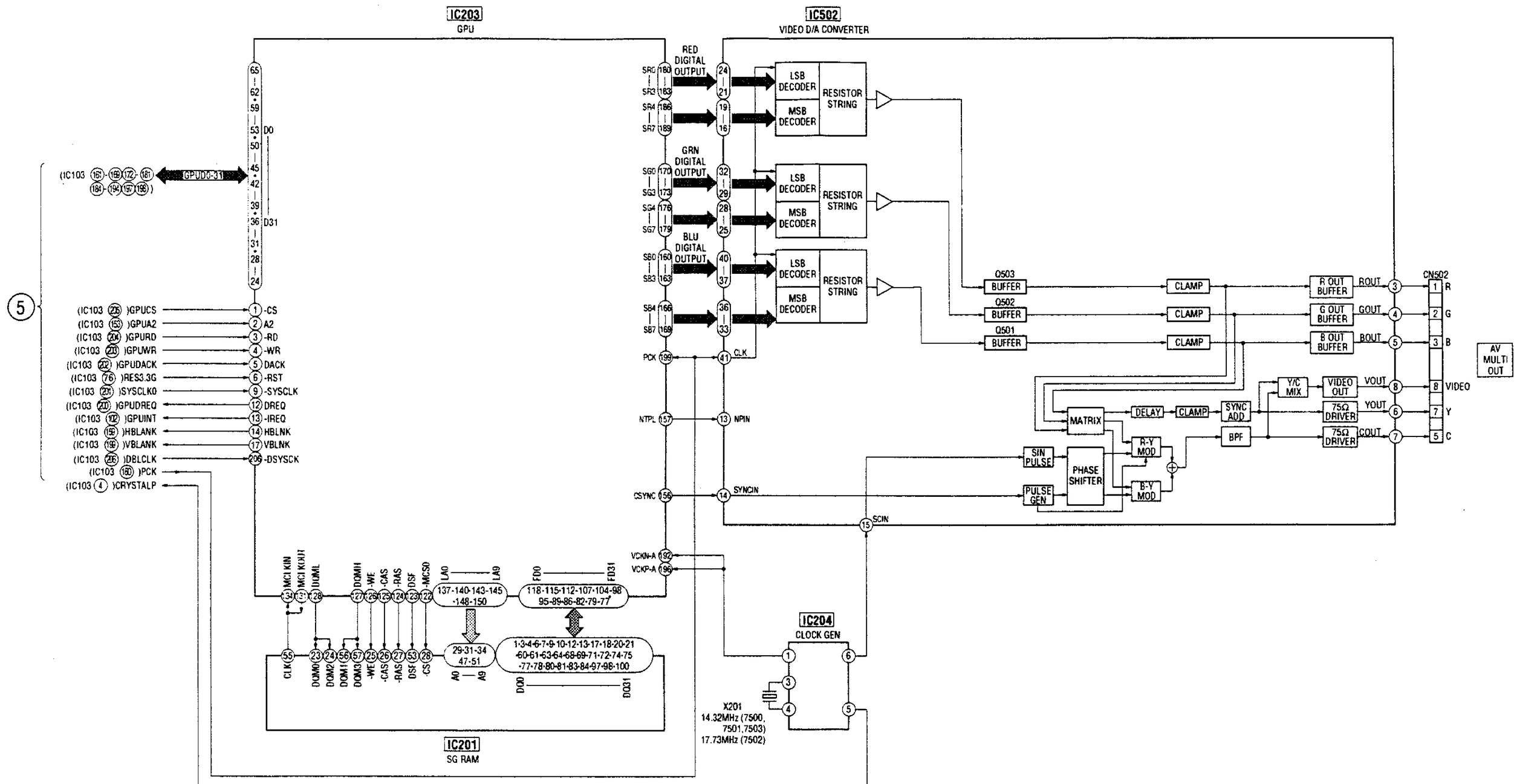

5. SERVO BLOCK DIAGRAM

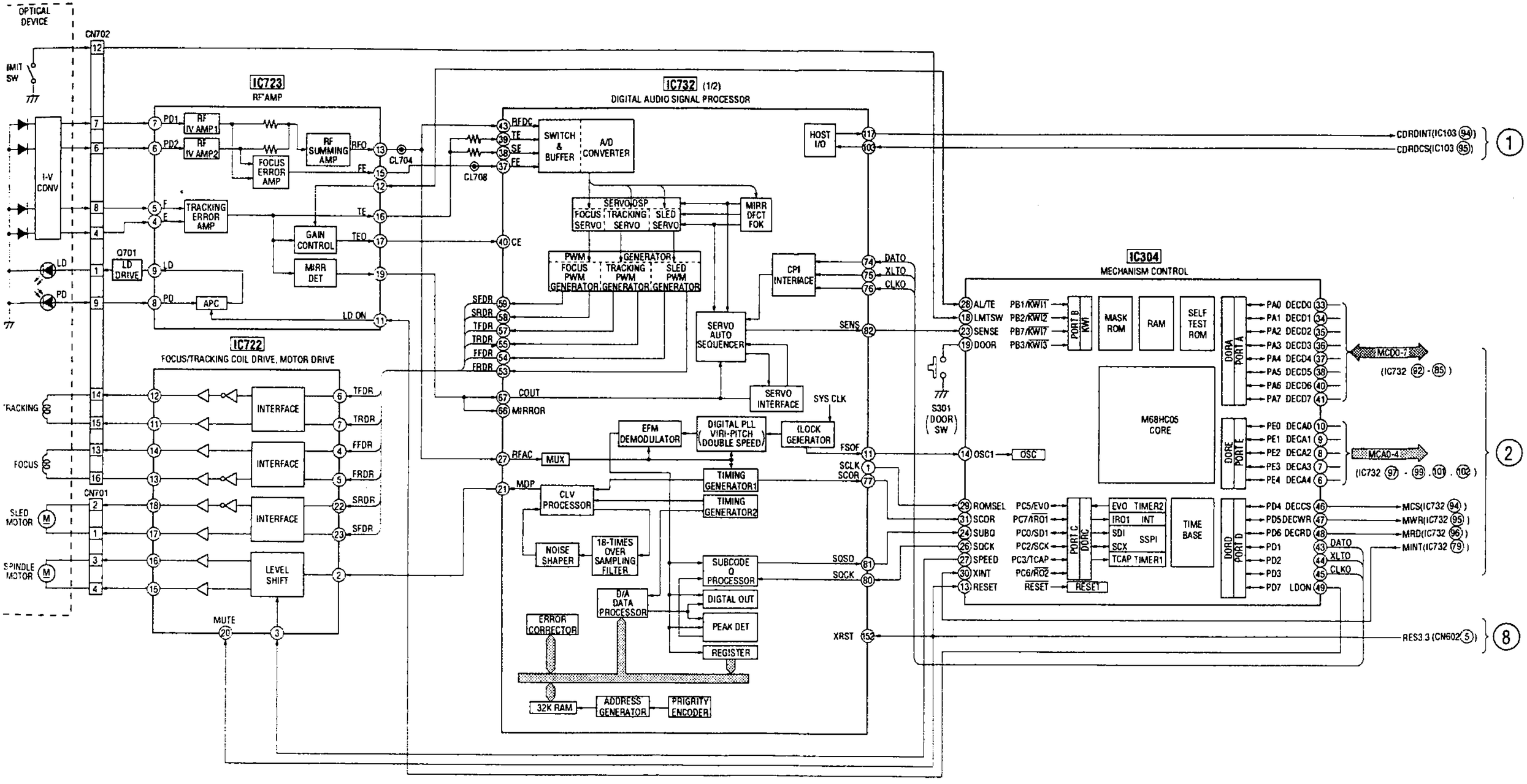

5-4. AUDIO BLOCK DIAGRAM

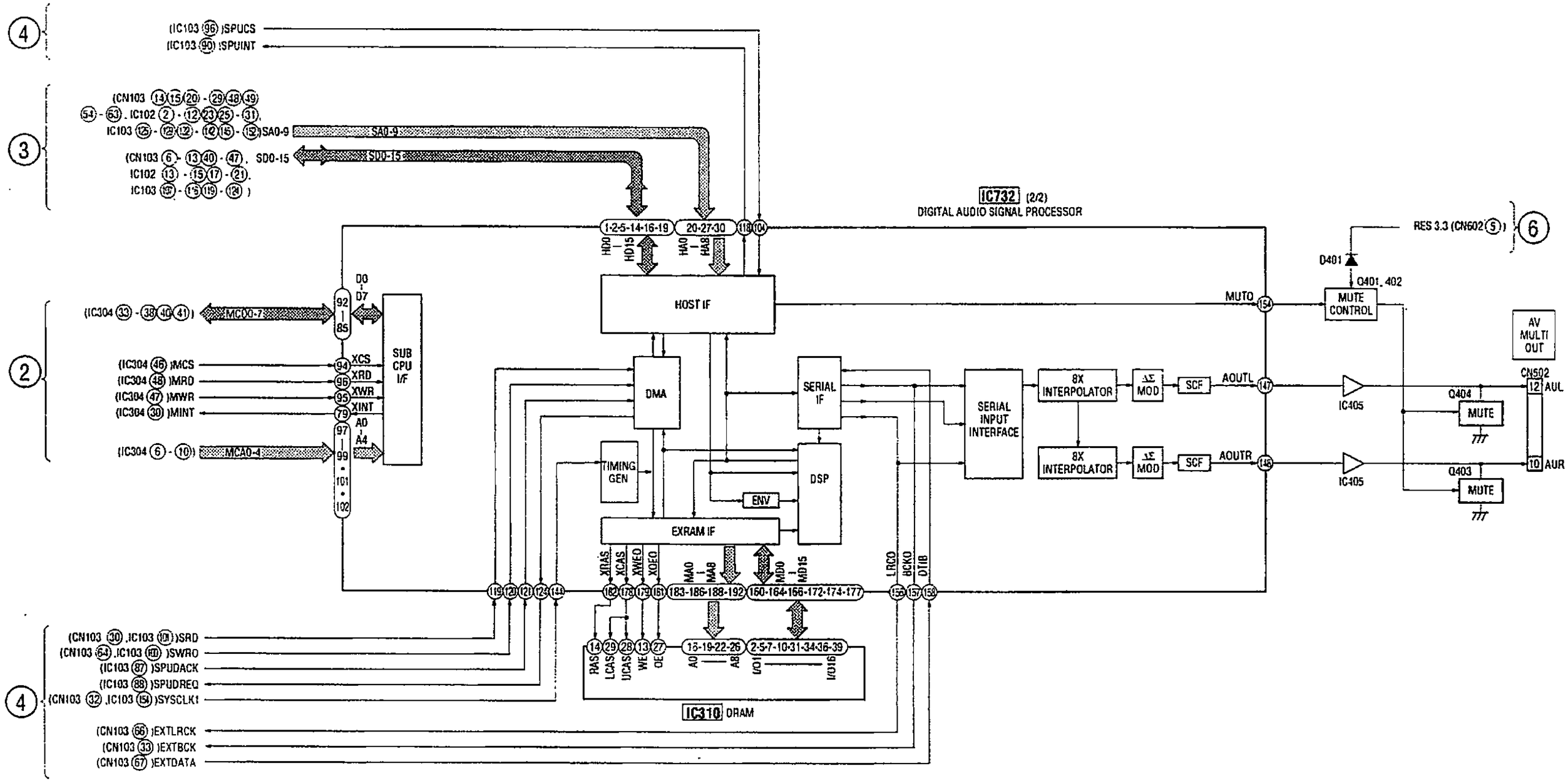

Reproduction prohibited

SECTION 3
ADJUSTMENTS

3-1. CHECK SPECIFICATION

RF level — 0.90 to 1.35 Vp-p (Check point : Between CL704 (HOT) and CL710 (VC).)

• RF signal waveform (eye pattern)

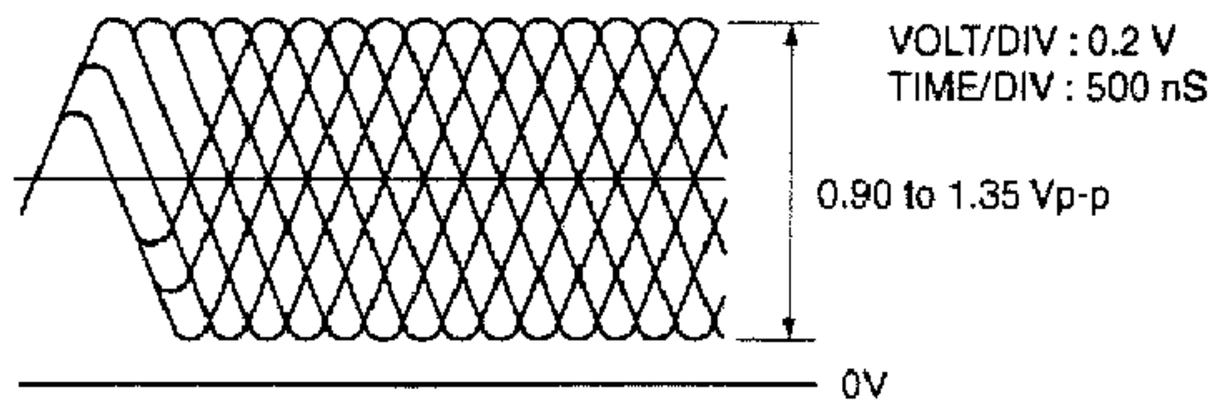

Use SCD-2700 DISC when measured RF level.
Use the oscilloscope with input impedance more than 10 MΩ.

RF Jitter — Below 9.0 nS (Measuring by KJM-6135S JITTER METER.)

Below 27.0 nS (Measuring by KJM-6235S JITTER METER.)

PP level — 1.1 ± 0.6 Vp-p (Check point : Between CL776 (HOT) and CL710 (VC).)

Use LPF (fc = 10 kHz)

Tracking level — 1.25 ± 0.65 Vp-p (Check point : Between CL709 (HOT) and CL710 (VC).)

Caution.	Vc Line (CL710) do not make common use with GND line.

Check Point for PU-22 Board.

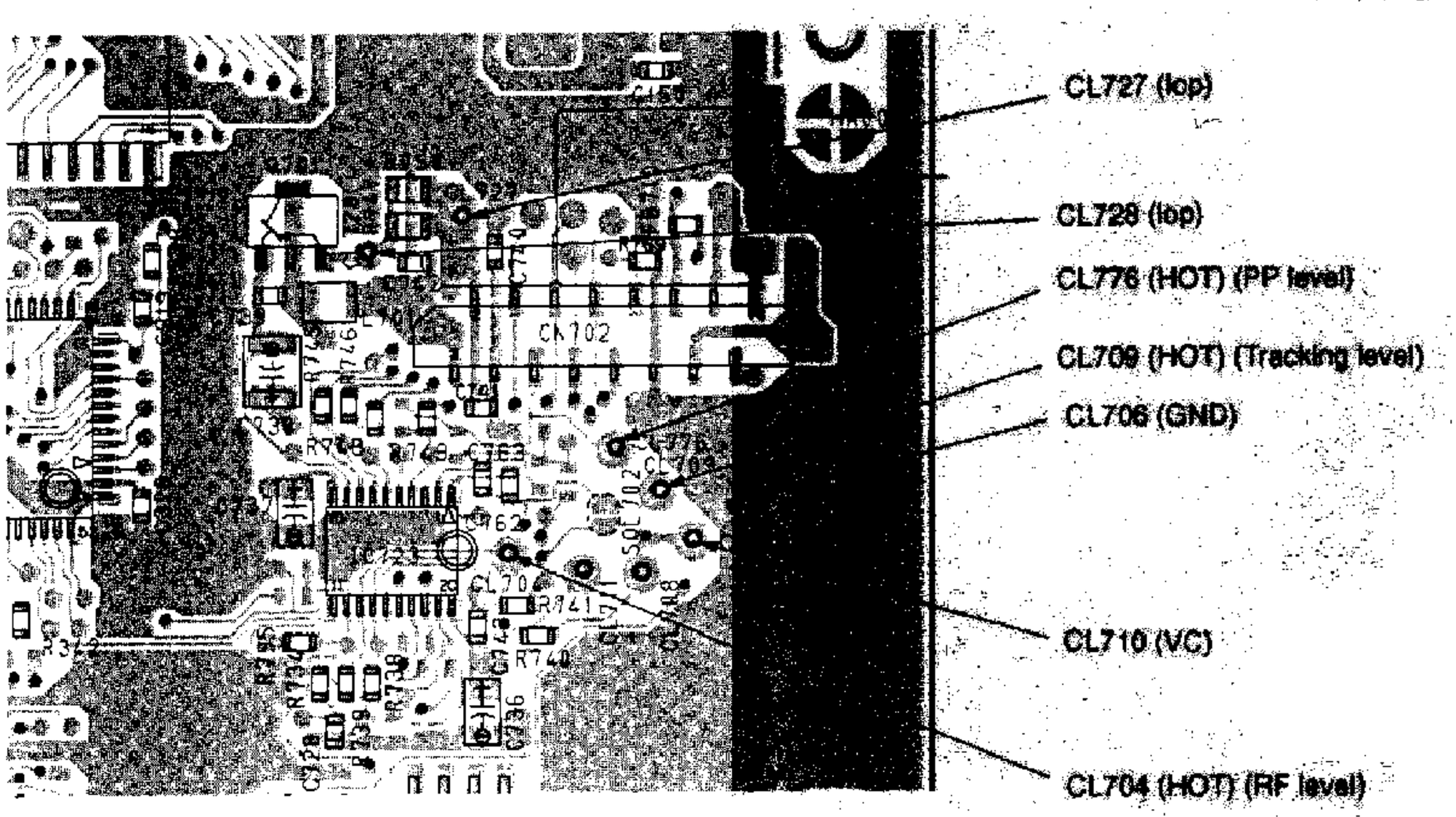

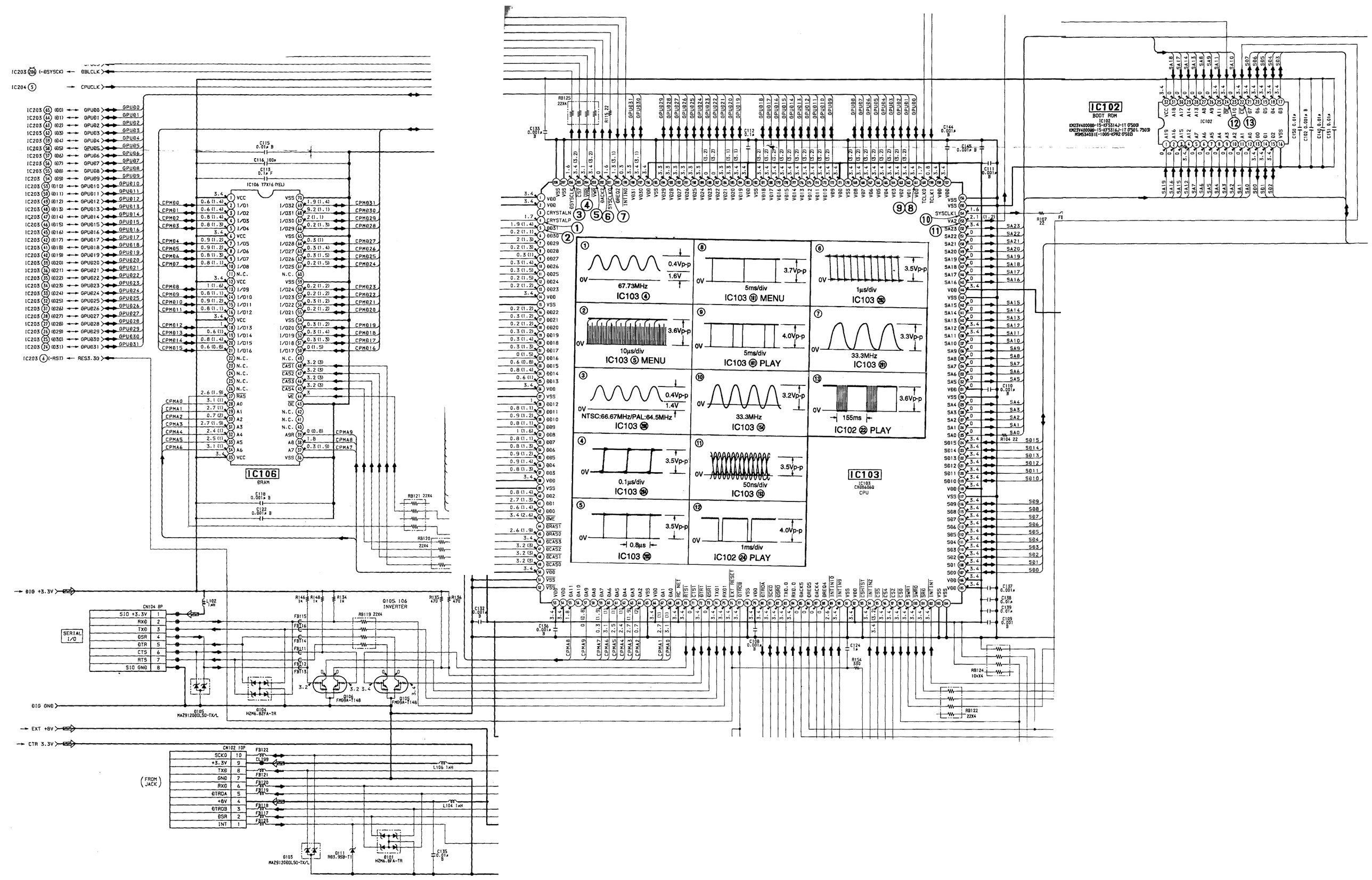
IC106
DRAM
IC103
CPU
IC102
BOOT ROM
Q105, 106
INVERTER
SERIAL I/O
CN104 8P
CN102 10P
(FROM JACK)
DIG +3.3V
DIG GND
EXT +8V
CTR 3.3V
IC103 ④
67.73MHz
IC103 ⑤ MENU
10μs/div
IC103 ⑥
1μs/div
IC103 ⑦
33.3MHz
IC103 ⑧
5ms/div
IC103 ⑨ PLAY
5ms/div
IC103 ⑩
33.3MHz
IC103 ⑪
50ns/div
IC103 ⑫ PLAY
1ms/div
IC103 ⑬
155ms
IC102 ㉒ PLAY
IC103 ⑭
IC103 ⑮
IC103 ⑯
IC103 ⑰
NTSC:66.67MHz/PAL:64.5MHz
IC103 ⑱
IC103 ⑲
IC103 ⑳
IC103 ㉑
IC103 ㉒
0.1μs/div
0.8μs

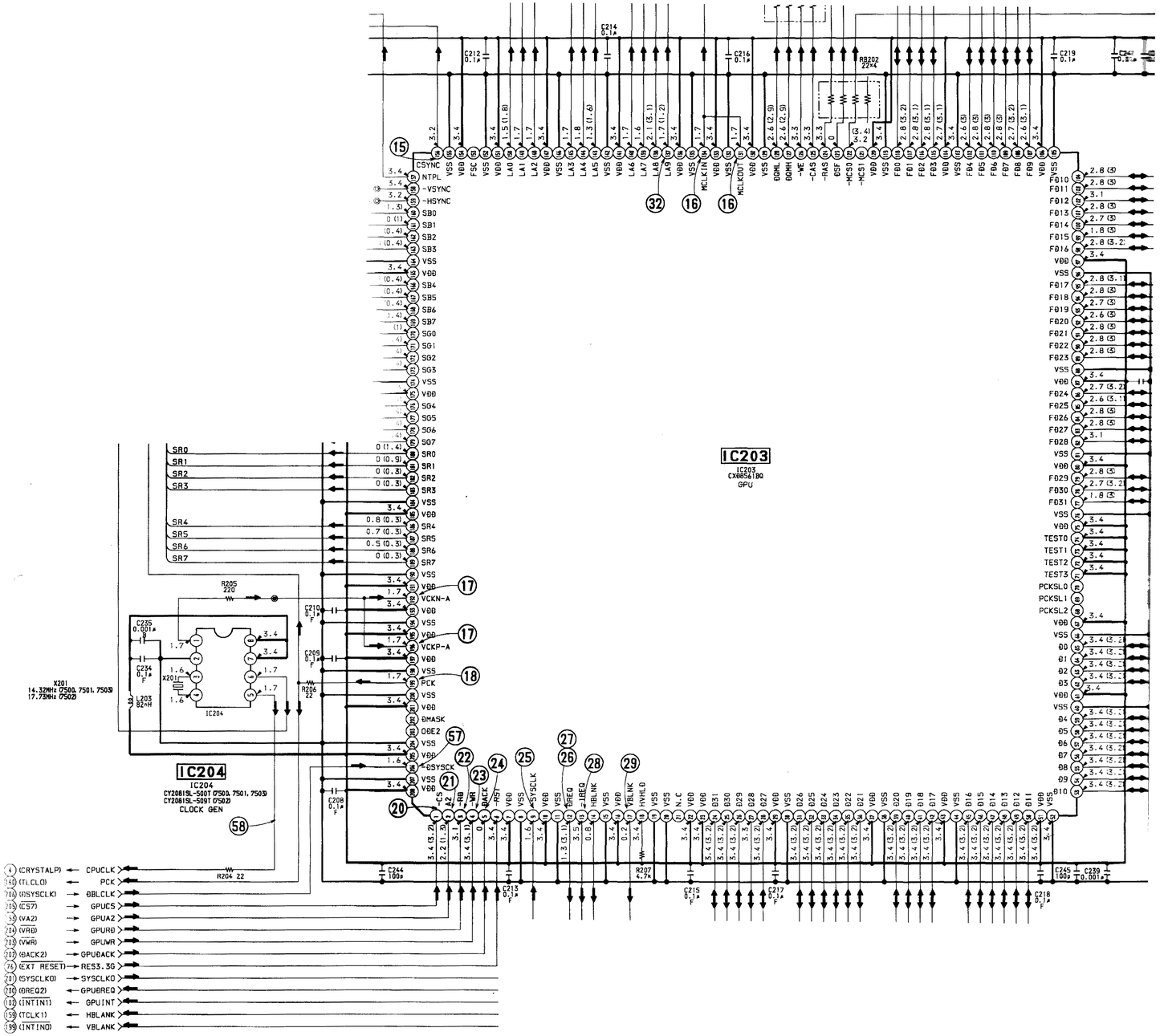
IC203
IC203
CX08561BQ
GPU
IC204
IC204
CY28815L-500T (7500, 7501, 7503)
CY28815L-509T (7502)
CLOCK GEN
X201
14.32MHz (7500, 7501, 7503)
17.75MHz (7502)
(CRYSTALP) CPUCLK
(TI.CLO) PCK
(DSYSCLK) DBLCLK
(CS7) GPUCS
(VA2) GPUA2
(VRD) GPURD
(VWR) GPUWR
(DACK2) GPUDACK
(EXT RESET) RES3.3O
(SYSCLKO) SYSCLKO
(DREQ2) GPUDREQ
(INTINT) GPUINT
(TCLK1) HBLANK
(INTIND) VBLANK

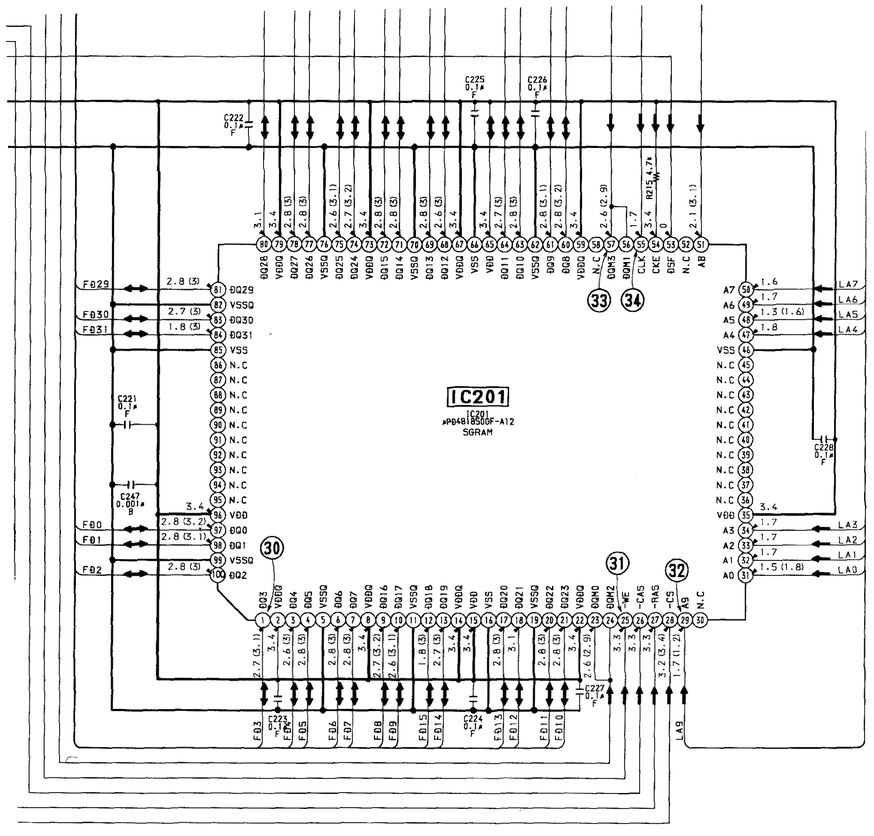
IC201
IC201
μPD4918500F-A12
SGRAM

6-5. SCHEMATIC DIAGRAM (PU-22 (-11/-12/-21/-22/-32) BOARD (3/5))

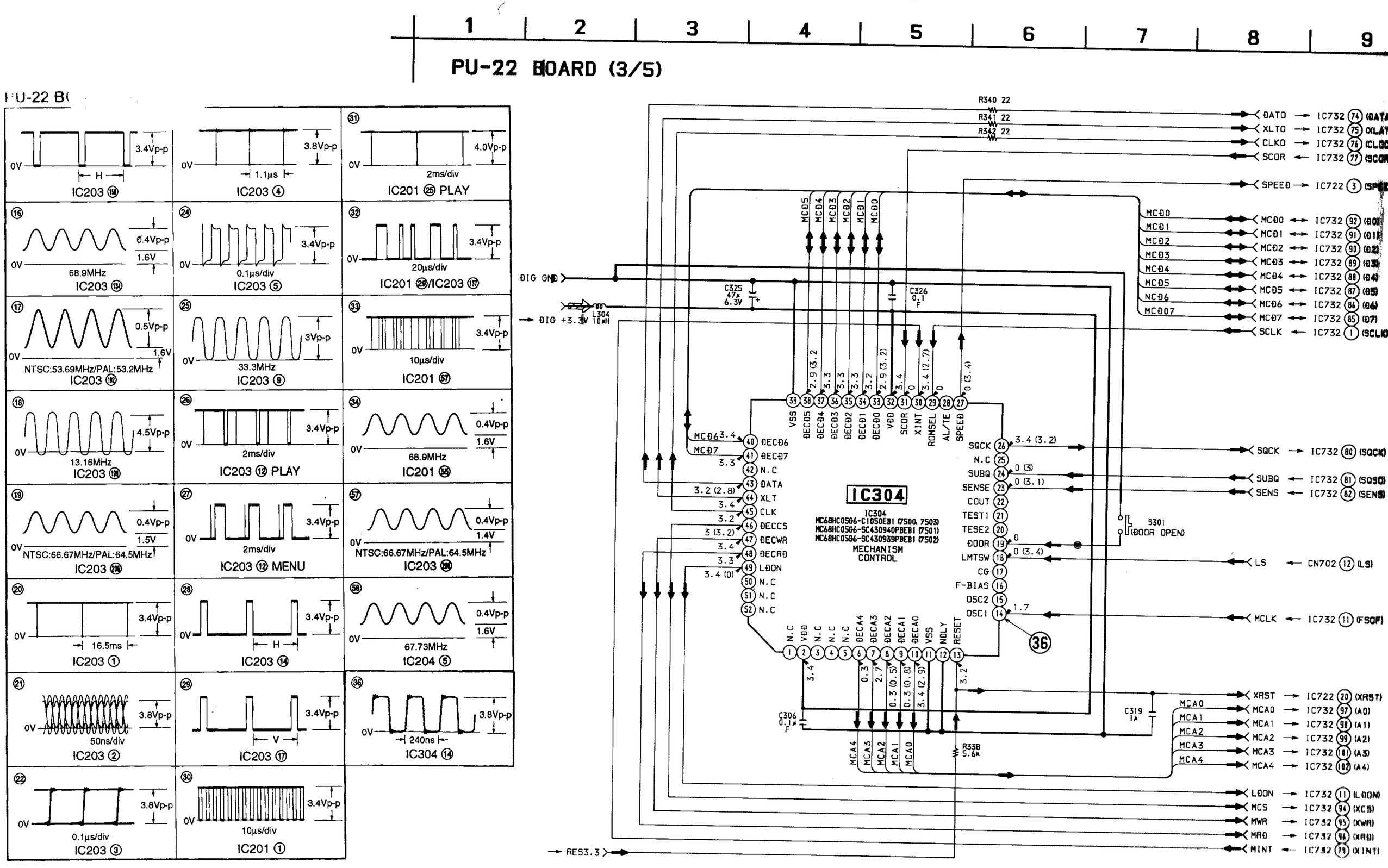

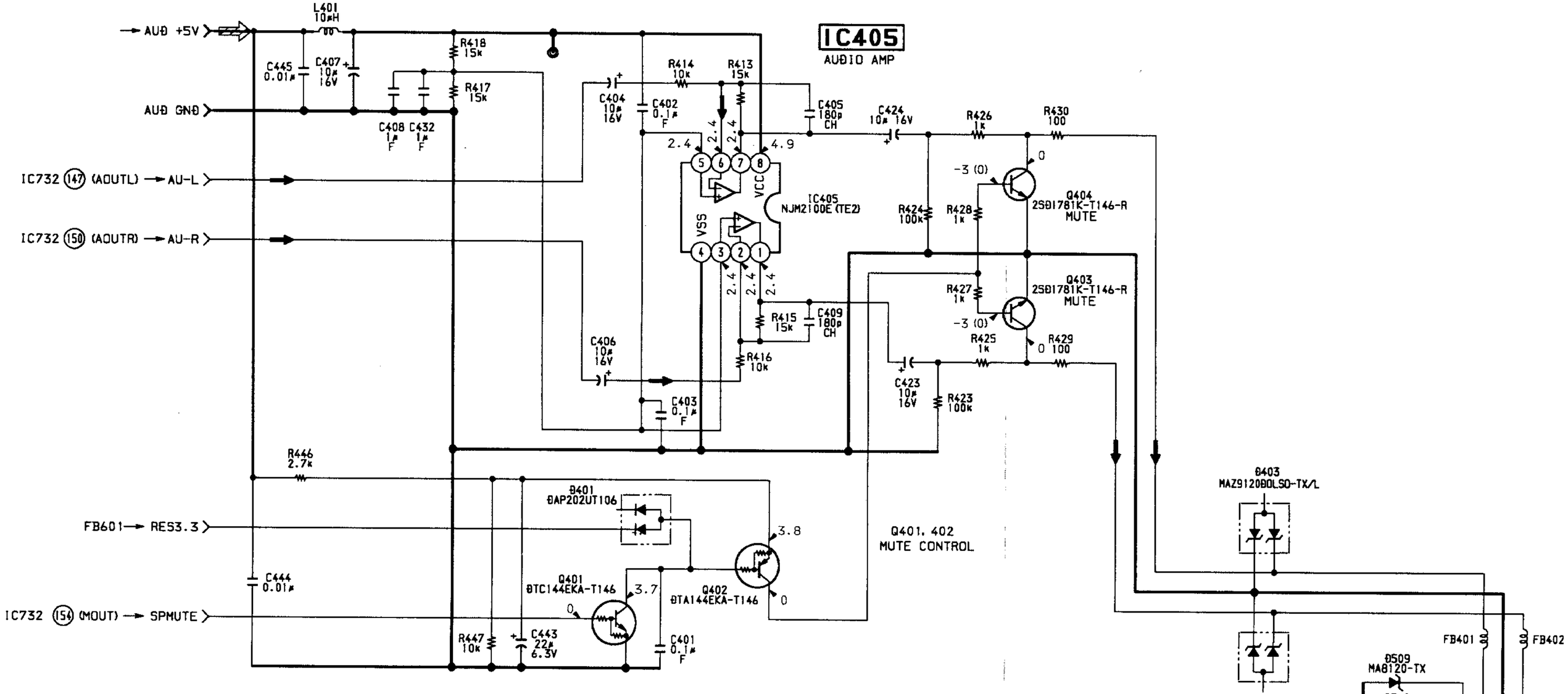
IC405
AUDIO AMP
AUD +5V
AUD GND
IC732 (147) (AOUTL) → AU-L
IC732 (150) (AOUTR) → AU-R
FB601 → RES3.3
IC732 (154) (MOUT) → SPMUTE
L401 10μH
C445 0.01μ
C407 10μ 16V
R418 15k
R417 15k
C408 1μ F
C432 1μ F
C404 10μ 16V
C402 0.1μ F
R414 10k
R413 15k
C405 180p CH
C424 10μ 16V
R426 1k
R430 100
IC405 NJM2100E (TE2)
VCC
VSS
R424 100k
R428 1k
Q404 2SD1781K-T146-R MUTE
Q403 2SD1781K-T146-R MUTE
R427 1k
R425 1k
R429 100
R415 15k
C409 180p CH
R416 10k
C406 10μ 16V
C403 0.1μ F
C423 10μ 16V
R423 100k
R446 2.7k
D401 DAP202UT106
Q401 DTC144EKA-T146
Q402 DTA144EKA-T146
Q401, 402 MUTE CONTROL
C444 0.01μ
R447 10k
C443 22μ 6.3V
C401 0.1μ F
D403 MAZ9120DOLSO-TX/L
D509 MA8120-TX
FB401
FB402

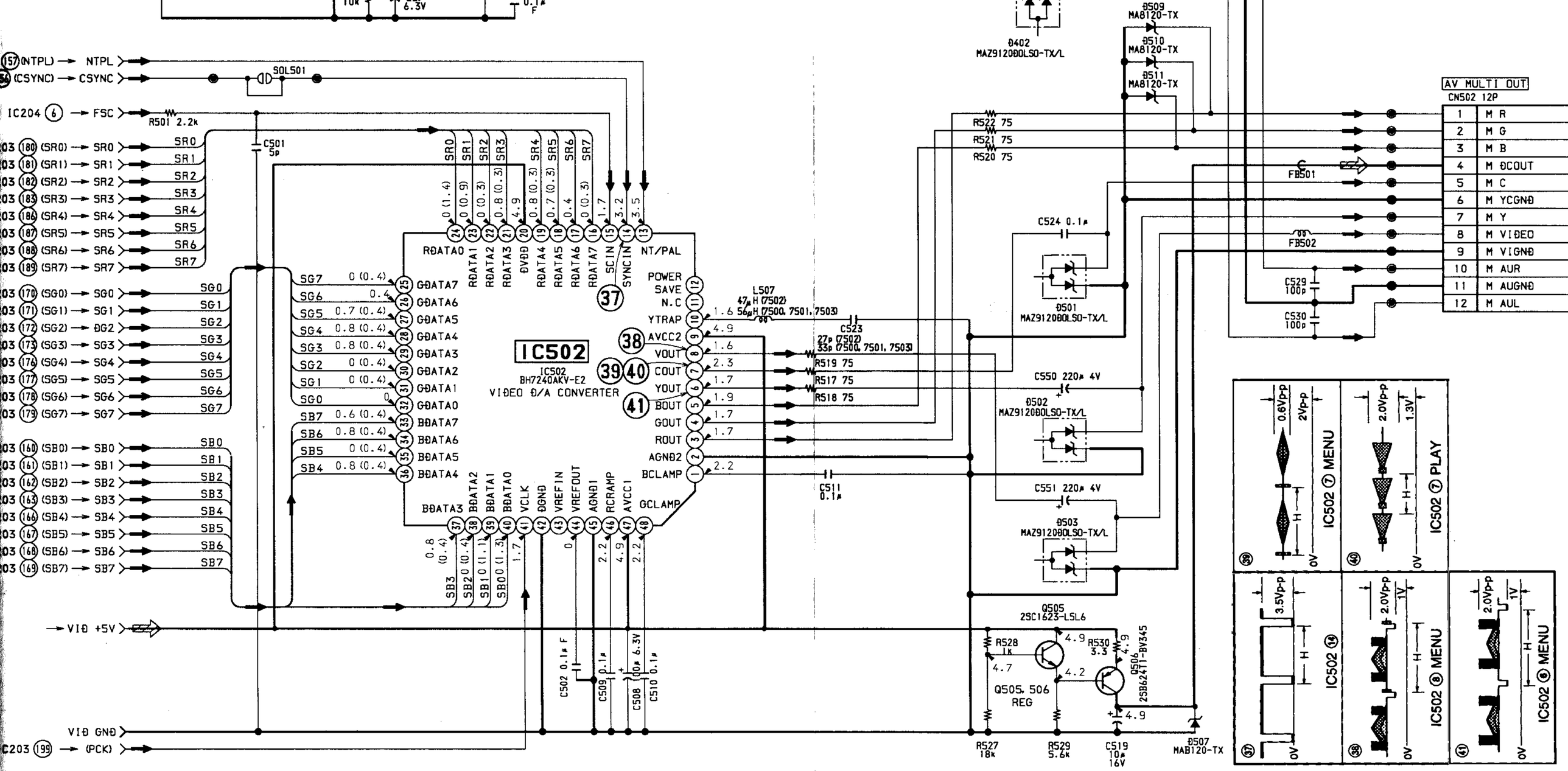
IC502
IC502
BH7240AKV-E2
VIDEO D/A CONVERTER
(NTPL) → NTPL
(CSYNC) → CSYNC
IC204 (6) → FSC
R501 2.2k
SDL501
C501 5p
(SR0) → SR0
(SR1) → SR1
(SR2) → SR2
(SR3) → SR3
(SR4) → SR4
(SR5) → SR5
(SR6) → SR6
(SR7) → SR7
(SG0) → SG0
(SG1) → SG1
(SG2) → SG2
(SG3) → SG3
(SG4) → SG4
(SG5) → SG5
(SG6) → SG6
(SG7) → SG7
(SB0) → SB0
(SB1) → SB1
(SB2) → SB2
(SB3) → SB3
(SB4) → SB4
(SB5) → SB5
(SB6) → SB6
(SB7) → SB7
→ VID +5V
VID GND
C203 (199) → (PCK)
RDATA0
RDATA1
RDATA2
RDATA3
DVDD
RDATA4
RDATA5
RDATA6
RDATA7
SCIN
SYNCIN
NT/PAL
POWER SAVE
N.C
YTRAP
AVCC2
VOUT
COUT
YOUT
BOUT
GOUT
ROUT
AGND2
BCLAMP
GCLAMP
GDATA7
GDATA6
GDATA5
GDATA4
GDATA3
GDATA2
GDATA1
GDATA0
BDATA7
BDATA6
BDATA5
BDATA4
BDATA3
BDATA2
BDATA1
BDATA0
VCLK
DGND
VREFIN
VREFOUT
AGND1
RCRAMP
AVCC1
L507
47μH (7502)
56μH (7500, 7501, 7503)
C523
27p (7502)
33p (7500, 7501, 7503)
R519 75
R517 75
R518 75
C511 0.1μ
C502 0.1μF
C509 0.1μ
C508 10μ 6.3V
C510 0.1μ
D402
MAZ9120D0LS0-TX/L
D509
MA8120-TX
D510
MA8120-TX
D511
MA8120-TX
R522 75
R521 75
R520 75
FB501
FB502
C524 0.1μ
D501
MAZ9120D0LS0-TX/L
C550 220μ 4V
D502
MAZ9120D0LS0-TX/L
C551 220μ 4V
D503
MAZ9120D0LS0-TX/L
C529 100p
C530 100p
Q505
2SC1623-L5L6
R528 1k
R530 3.3
Q506
2SB62411-BV345
Q505, 506
REG
R527 18k
R529 5.6k
C519 10μ 16V
D507
MA8120-TX
AV MULTI OUT
CN502 12P
1 M R
2 M G
3 M B
4 M DCOUT
5 M C
6 M YCGND
7 M Y
8 M VIDEO
9 M VIGND
10 M AUR
11 M AUGND
12 M AUL
IC502 ⑦ MENU
IC502 ⑦ PLAY
IC502 ⑭
IC502 ⑧ MENU
IC502 ⑥ MENU

DARD (4/5)

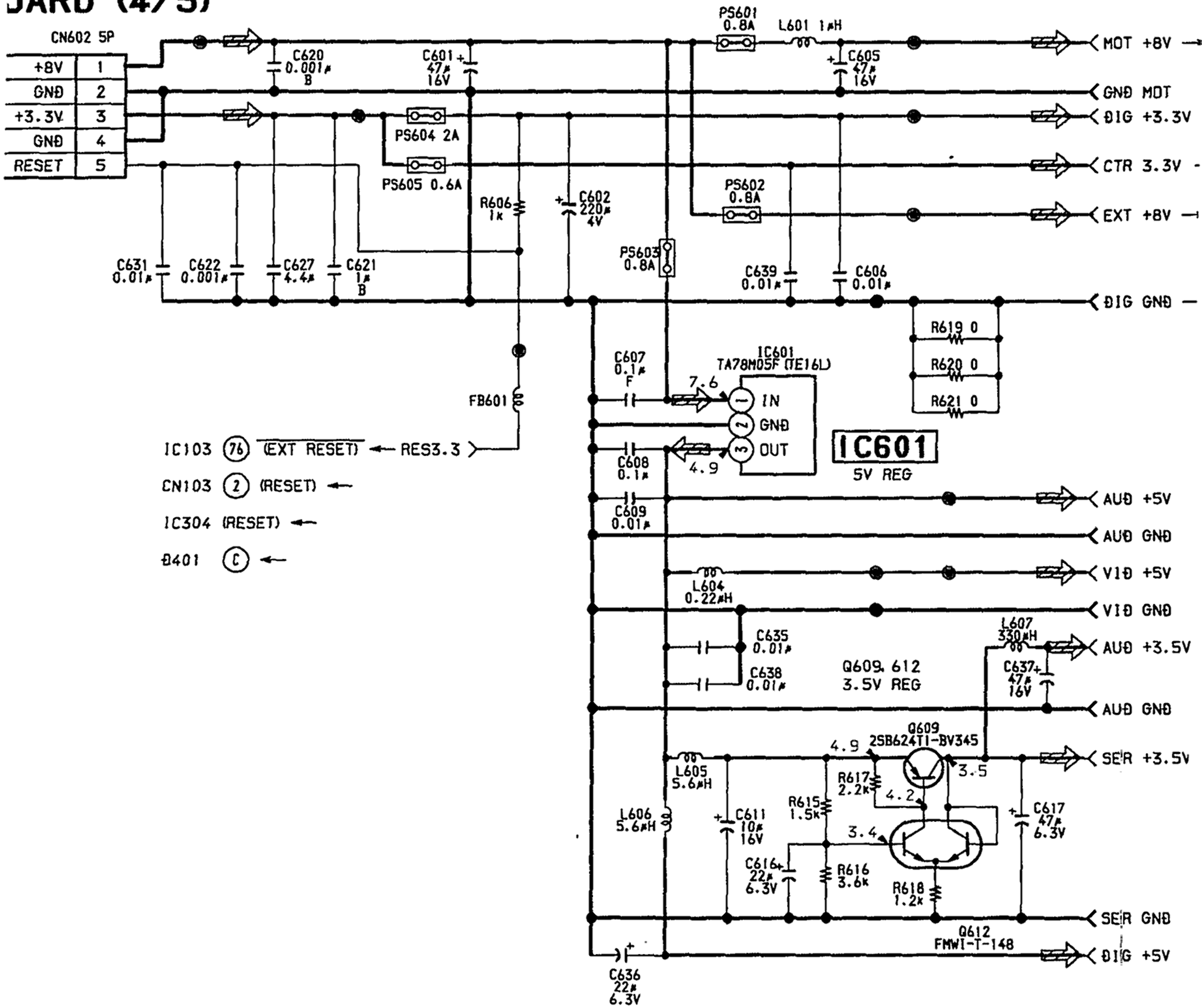
CN602 5P
+8V 1
GND 2
+3.3V 3
GND 4
RESET 5
C620 0.001μ B
C601 47μ 16V
PS604 2A
PS605 0.6A
R606 1k
C602 220μ 4V
PS601 0.8A
L601 1μH
C605 47μ 16V
PS602 0.8A
PS603 0.8A
C631 0.01μ
C622 0.001μ
C627 4.4μ
C621 1μ B
C639 0.01μ
C606 0.01μ
R619 0
R620 0
R621 0
C607 0.1μ F
IC601 TA78M05F (TE16L)
7.6
IN
GND
OUT
4.9
IC601
5V REG
C608 0.1μ
C609 0.01μ
FB601
IC103 76 (EXT RESET) ← RES3.3
CN103 2 (RESET) ←
IC304 (RESET) ←
Q401 C ←
L604 0.22μH
C635 0.01μ
C638 0.01μ
L607 330μH
C637 47μ 16V
Q609, 612
3.5V REG
Q609 2SB624T1-BV345
4.9
3.5
4.2
3.4
R617 2.2k
R615 1.5k
R616 3.6k
R618 1.2k
L605 5.6μH
L606 5.6μH
C611 10μ 16V
C616 22μ 6.3V
C617 47μ 6.3V
Q612 FMWI-T-148
C636 22μ 6.3V
MOT +8V
GND MOT
DIG +3.3V
CTR 3.3V
EXT +8V
DIG GND
AUD +5V
AUD GND
VID +5V
VID GND
AUD +3.5V
AUD GND
SER +3.5V
SER GND
DIG +5V

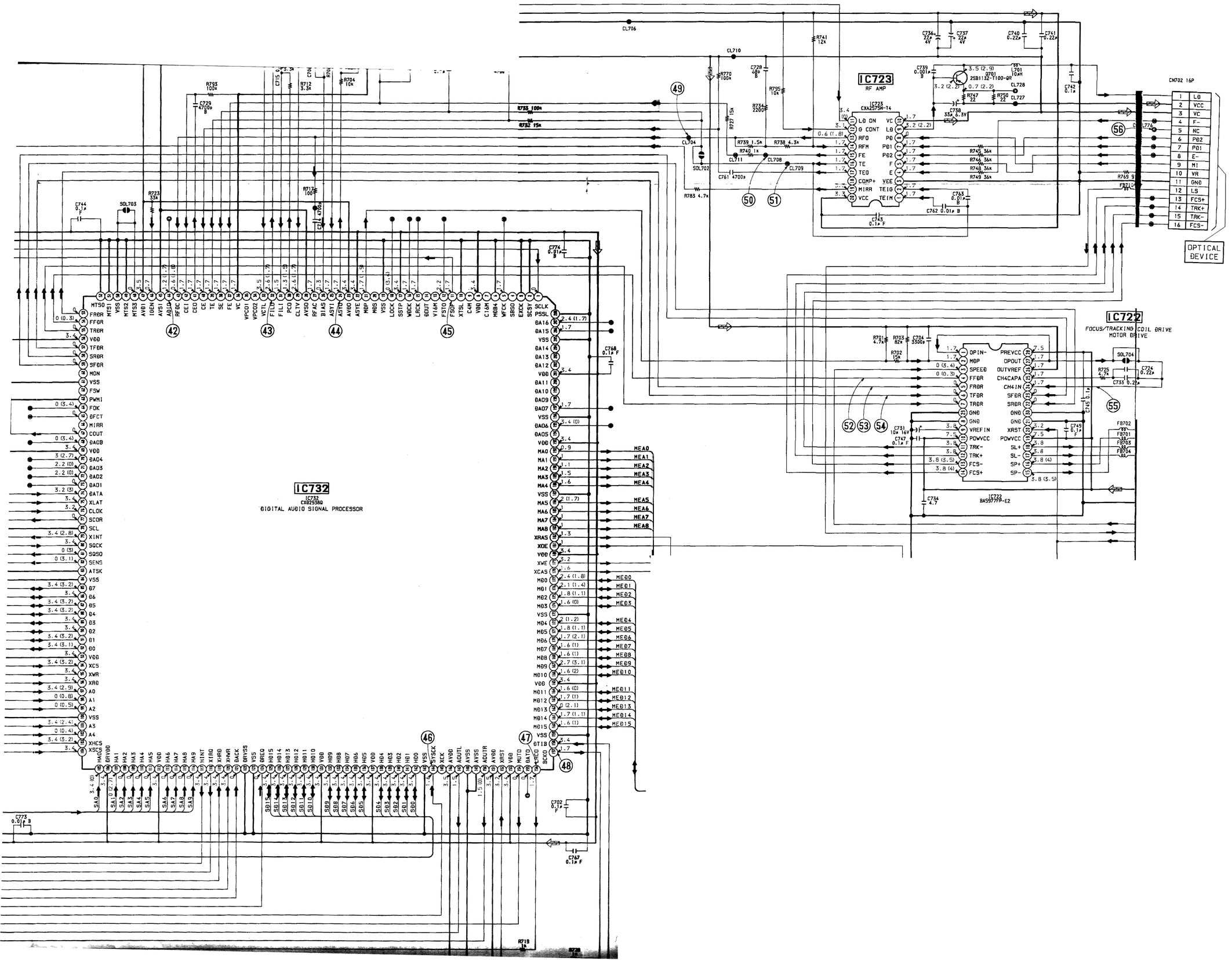
IC723
RF AMP
IC722
FOCUS/TRACKING COIL DRIVE
MOTOR DRIVE
IC732
CX82930
DIGITAL AUDIO SIGNAL PROCESSOR
OPTICAL DEVICE
CN702 16P
LD
VCC
VC
F-
NC
PD2
PD1
E-
MI
VR
GND
LS
FCS+
TRK+
TRK-
FCS-

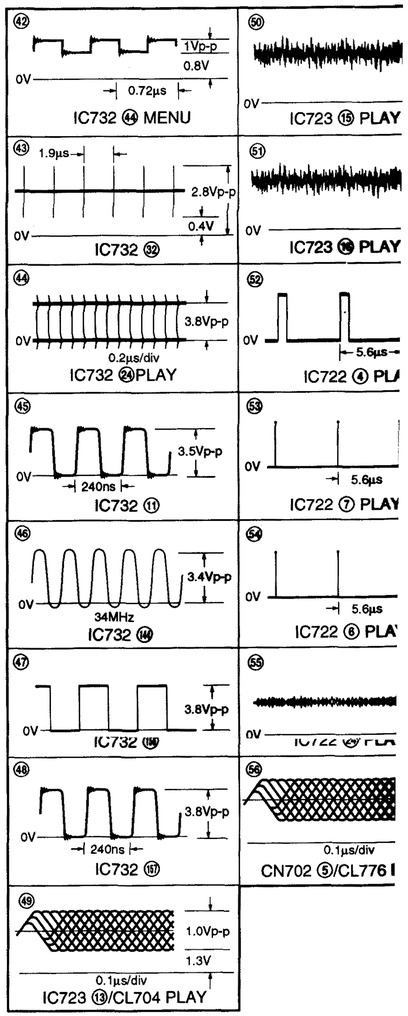
IC732 ㊹ MENU
IC723 ⑮ PLAY
IC732 ㉜
IC723 ⑯ PLAY
IC732 ㉔PLAY
IC722 ④ PLA
IC732 ⑪
IC722 ⑦ PLAY
IC732 ⑭
IC722 ⑧ PLA
IC732 ⑮
IC732 ⑰
CN702 ⑤/CL776
IC723 ⑬/CL704 PLAY