SCPH-30001
SCPH-30002
SCPH-30003
SCPH-30004

SCPH-30000 series

SERVICE MANUAL

2nd Edition

PlayStation®2

SONY COMPUTER ENTERTAINMENT ®

Sony Computer Entertainment Inc.
Customer Service Department
Published in Japan c 11. 2000 9-927-084-02

Reproduction Prohibited

NOTICE

Copyright by Sony Computer Entertainment Inc. All rights reserved. No reproduced and transferred required except permission by Sony Computer Entertainment Inc. No commercial use and rental required.

REVISIONS.

This manual compiled by first edition of SCPH-30001, -30002, -30003, -30004 B and C type design data.
Design and Specification will be subject to changed without notice. The latest versions of service manual, Technical memo, Technical information should be used together.

SAFETY-RELATED COMPONENT WARNING !!

COMPONENTS IDENTIFIED BY MARK ⚠ OR DOTTED LINE WITH MARK ⚠ ON THE SCHEMATIC DIAGRAMS AND IN THE PARTS LIST ARE CRITICAL TO SAFE PERATION. REPLACE THESE COMPONENTS WITH SONY PARTS WHOSE PART NUMBERS APPEAR AS SHOWN IN THIS MANUAL OR IN SUPPLEMENTS PUBLISHED BY SONY.

ATTENTION AU COMPOSANT AYANT RAPPORT À LA SÉCURITÉ !

LES COMPOSANTS IDENTIFIÉS PAR UNE MARQUE ⚠ SUR LES DIAGRAMMES SCHÉMATIQUES ET LA LISTE DES PIÈCES SONT CRITIQUES POUR LA SÉCURITÉ DE FONCTIONNEMENT. NE REMPLACER CES COMPOSANTS QUE PAR DES PIÈCES SONY DONT LES NUMÉROS SONT DONNÉS DANS CE MANUEL OU DANS LES SUPPLÉMENTS UBLIÉS PAR SONY.

CAUTION

Replace the battery with a Sony CR2032 battery. Use of any other type of battery may present the risk of fire or explosion. The battery may explode if mistreated. Do not recharge, disassemble, or dispose of in fire.

CAUTION

The use of optical instruments with this product will increase eye Hazard. As the laser beam used in this CD/DVD player is harmful To eyes, do not attempt to disassemble the cabinet. Refer servicing to qualified personnel only.

WARNING !!

WHEN SERVICING, DO NOT APPROACH THE LASER EXIT WITH THE EYE TOO CLOSELY. IN CASE IT IS NECESSARY TO CONFIRM LASER BEAM EMISSION, BE SURE TO OBSERVE FROM A DISTANCE OF MORE THAN 25 CM FROM THE SURFACE OF THE OBJECTIVE LENS ON THE OPTICAL PICK-UP BLOCK.

CAUTION

Use of controls or adjustments or performance of procedures other than those specified herein may result in hazardous radiation exposure.

CAUTION for electric shock

When power is ON, Don't touch to Power supply block, AC-inlet, Power switch and so on, not to get an electric shock at repair.

CAUTION for burning

When current is supplied, Some of part surface temperature like EE, GS, Regulater-IC, power supply, Optical device and so on. These part surface is become high temperature condition. When it repair, Don't touch them at a time during it surface is high temperature condition to take prevent against burning. Do repair after it is cooled down enough.

CAUTION

Danger of explosion if battery is incorrectly replaced. Replace only with the same or equivalent type recommended by the manufacturer. Discard used batteries according to the manufacturer's instructions.

ADVARSEL!

Lithiumbatteri - Eksplosionsfare ved fejlagtig håndtering. Udskiftning må kun ske med batteri af samme fabrikat og type. Levér det brugte batteri tilbage til leverandøren.

ADVARSEL

Eksplosjonsfare ved feilaktig skifte av batteri. Benytt samme batteritype eller en tilsvarende type anbefalt av apparatfabrikanten. Brukte batterier kasseres i henhold til fabrikantens instruksjoner.

VARNING

Explosionsfara vid felaktigt batteribyte. Använt samma batterityp eller en ekvivalent typ som rekommenderas av apparattillverkaren. Kassera använt batteri enligt fabrikantens instruktion.

VAROITUS

Paristo voi räjähtää, jos se on virheellisesti asennettu. Vaihda paristo ainoastaan valmistajan suosittelemaan tyyppiin. Hävitä käytetty paristo valmistajan ohjeiden mukaisesti.

SAFETY CHECK-OUT

After correcting the original service problem, perform the following safety checks before releasing the set to the customer:

1. Check the area of your repair for unsoldered or cold-soldered connections. Check the entire board surface for solder splashes and bridges.
2. Check the inter board wiring to ensure that no wires are "pinched" or contact high-wattage resistors.
3. Look for unauthorized replacement parts, particularly transistors, that were installed during a previous repair. Point them out to the customer and recommend their replacement.
4. Look for parts which, though functioning, show obvious signs of deterioration. Point them out of the customer and recommend their replacement.
5. Check the line cord for cracks and abrasion. Recommend the replacement of any such line cord to the customer.
6. Check the b+ voltage to see it is at the values specified.
7. Check the antenna terminals, metal trim, "metalized" knobs, screws, and all other exposed metal parts for ac leakage. Check leakage as described below.

LEAKAGE

The AC leakage from any exposed metal part to earth ground and from all exposed metal parts to any exposed metal part having a Return to chassis, must not exceed 0.5 mA (500 micro-ampers). Leakage current can be measured by any one of three methods.

1. A commercial leakage tester, such as the SIMPSON 229 or RCA WT-540A. Follow the manufacturers' instructions to use these instruments.
2. A battery-operated AC milli-ammeter. The Data Precision 245 digital multi-meter is suitable for this job
3. Measuring the voltage drop across a resistor by means of a VOM or battery-operated ac voltmeter. The "limit" indication is 0.75V, so analog meters must have an accurate low-voltage scale. The SIMPSON 250 and SANWA SH-63TRD are examples of a passive VOM that is suitable. Nearly all battery operated digital multi-meters that have a 2V AC range are suitable.

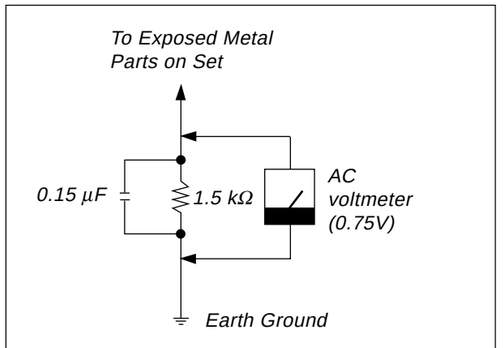

Fig A. Using AC voltmeter to check AC leakage

NOTIFICATION for environmental assessment

This model is CR2032 lithium battery onboard inside on the GD MOUNT as Timer backup power. CR2032 life may be about 5 to 8 years so you have very few need for changing to new one. But if you have necessary to replaced to new one or disassemble for scrapping, you have to keep your country low, regulation, standard, etc. of environmental assessment and safty.

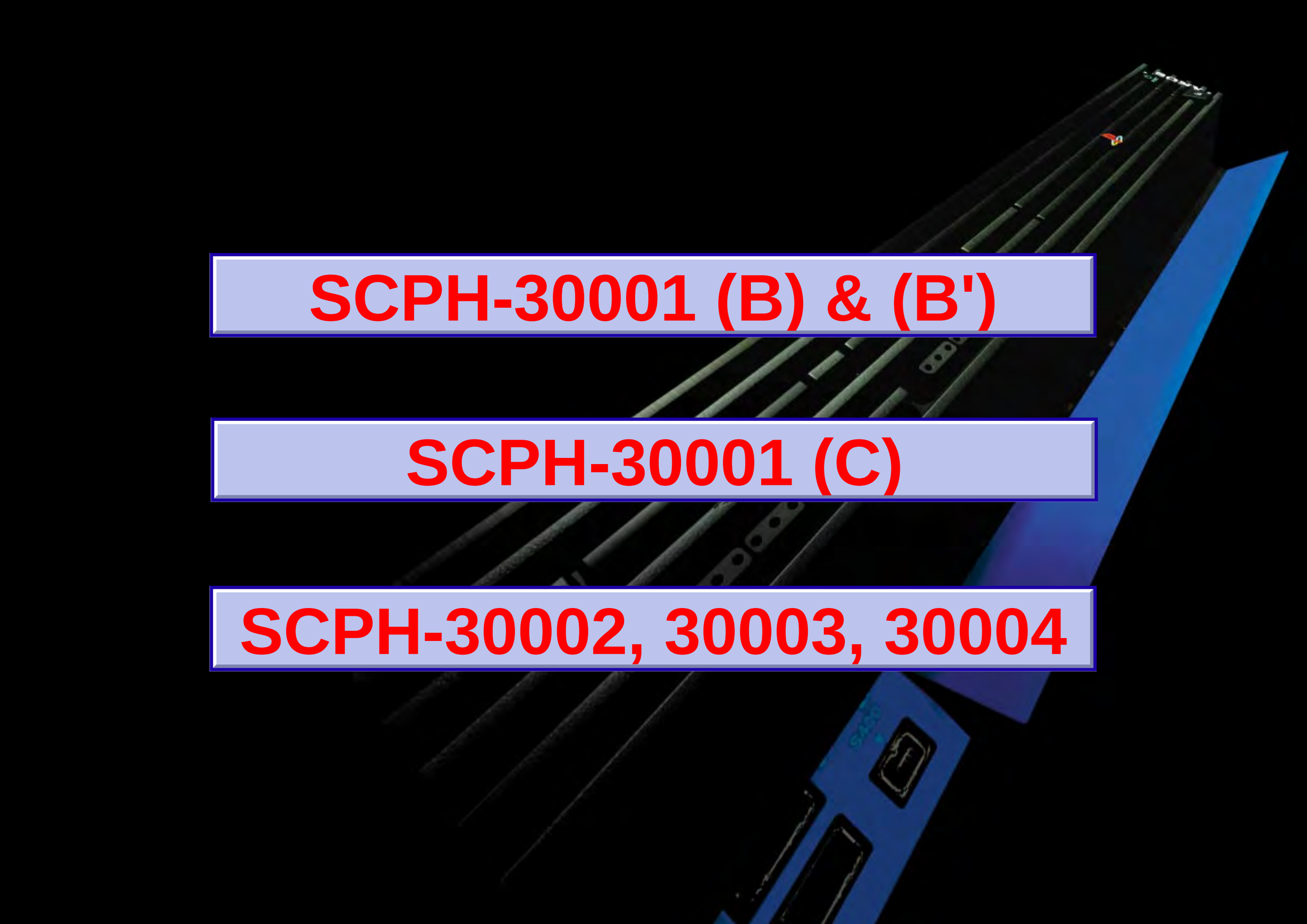
SCPH-30001 (B) & (B')
SCPH-30001 (C)
SCPH-30002, 30003, 30004

Reproduction Prohibited

TABLE OF CONTENTS

SCPH-30001 (B, B')

1. **Table of Contents and Specifications 1**

2. **Exploded Views**
   - Switch, Overall and Main Block (1) 2
   - Switch, Overall and Main Block (2) 3
   - MD Block 4

3. **Block Diagram 5**

4. **Printed Wiring Boards and Schematic Diagrams**
   - This Note is Common for Printed Wiring boards and Schematic diagrams 6
   - GH-004/005 7
   - GD-011 19
   - GD-012 21
   - GM-041 23
   - GI-004 26
   - SW-350 28
   - FREKI 29
   - IC Block Diagrams 30

5. **Electrical Parts List 34**

SCPH-30001 (C)

SCPH-30002/30003/30004 (C, C')

SECTION 1
SPECIFICATIONS

General
Power requirements
120 V AC, 60 Hz
Power consumption
79 W
Dimensions
301 × 78 × 182 mm (w/h/d)
Mass
2.4 kg

Inputs/ Outputs on the front
Controller ports (2)
Memory card slots (2)
USB ports (2)
S400 (i-Link) port (1)

Inputs/Outputs on the rear
HDD bay slot (1)

Outputs on the rear
AV Multi out port (1)
RGB, Ycbcr, Y/C, Composite-video, Audio-L/R, XGA
Digital out port (1)
Optical audio

Supplied accessories
AC power cord (1)
A/V connecting cable (1)
Dualshock2 Analog controller (1)

Reproduction Prohibited

Switch, Overall and Main Block (1)

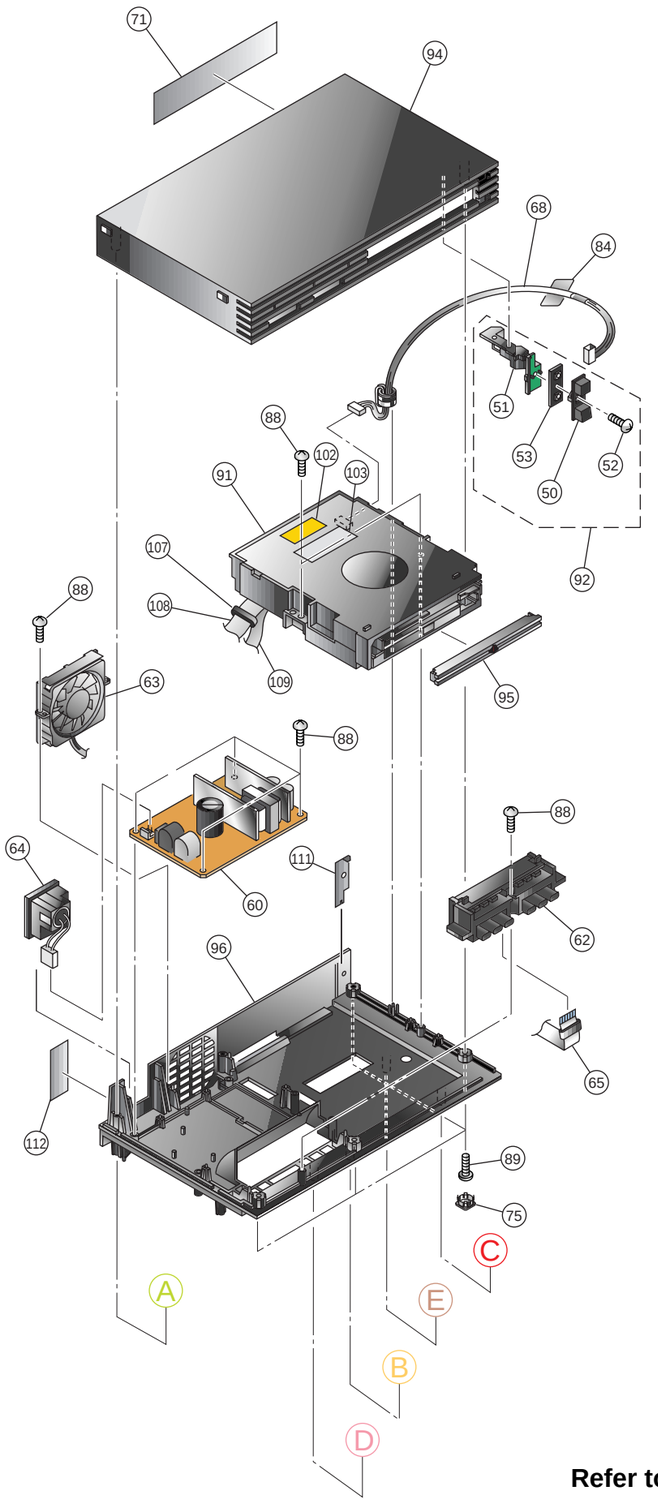

Refer to page 3 (Ⓐ to Ⓑ)

SECTION 2
EXPLODED VIEWS

CAUTION

The components identified by mark ⚠ or dotted line with mark. ⚠ are critical for safety. Replace only with part number specified.

CAUTION :
Use of controls or adjustments or performance of procedures other than those specified herein may result in hazardous radiation exposure.

SWITCH, OVERALL AND MAIN BLOCK (1)

	Ref-No.	Part No.	Description	Remark	Place code
	50	3-059-665-0□	BUTTON,SWITCH		#25SW
	51	3-059-666-0□	BRACKET,SWITCH		#25SW
	52	7-685-105-11	TPG +P 2X8,TYPE 2,NON-SLIT		#25SW
	53	A-6712-759-A	SW-350 MOUNT		#25SW
⚠	60	1-468-563-□□	POWER BLOCK		#00
	62	1-694-767-□□	TERMINAL BOARD (FRONT)		#17
	63	1-763-480-□□	DC.FAN		#74
⚠	64	1-771-994-□□	SWITCH,POWER (WITH AC INLET)		#00
	65	1-792-491-□□	CABLE,FLEXIBLE FLAT (FFC-290)		#12
	68	1-960-977-□□	HARNESS (HS-056)		#16
	71	3-064-825-□□	LABEL,MODEL NUMBER		#87
	75	3-059-626-□□	COVER,SCREW		#22
	84	3-060-398-□□	TAPE,HARNESS STOPPER		#88
	88	3-325-679-21	SCREW,TAPPING +BV 3X12		#87
	89	3-325-679-91	SCREW,TAPPING +BV 3X16		#87
	91	A-6705-089-A	MD BLOCK ASSY		#10
	92	A-6705-077-A	SWITCH BLOCK ASSY		#25SW
	94	X-3951-096-□	COVER ASSY,UPPER		#87
	95	X-3951-099-□	PLATE ASSY,ORNAMENTAL		#87
	96	X-3951-100-□	CHASSIS ASSY		#87
⚠	102	3-969-533-□□	LABEL,CAUTION SERIAL (NO.)		#88
⚠	103	3-976-231-□□	LABEL,CAUTION		#88
	107	1-400-038-11	CORE,FERRITE		#12
	108	1-757-474-11	CABLE,FLEXIBLE FLAT (FFC-003)		#12
	109	1-757-475-11	CABLE,FLEXIBLE FLAT (FFC-005)		#12
	111	3-066-103-□□	BRACKET (B),UNIT		#16
	112	3-066-253-□□	TAPE,VOID		#87

Reproduction Prohibited

Switch, Overall and Main Block (2)

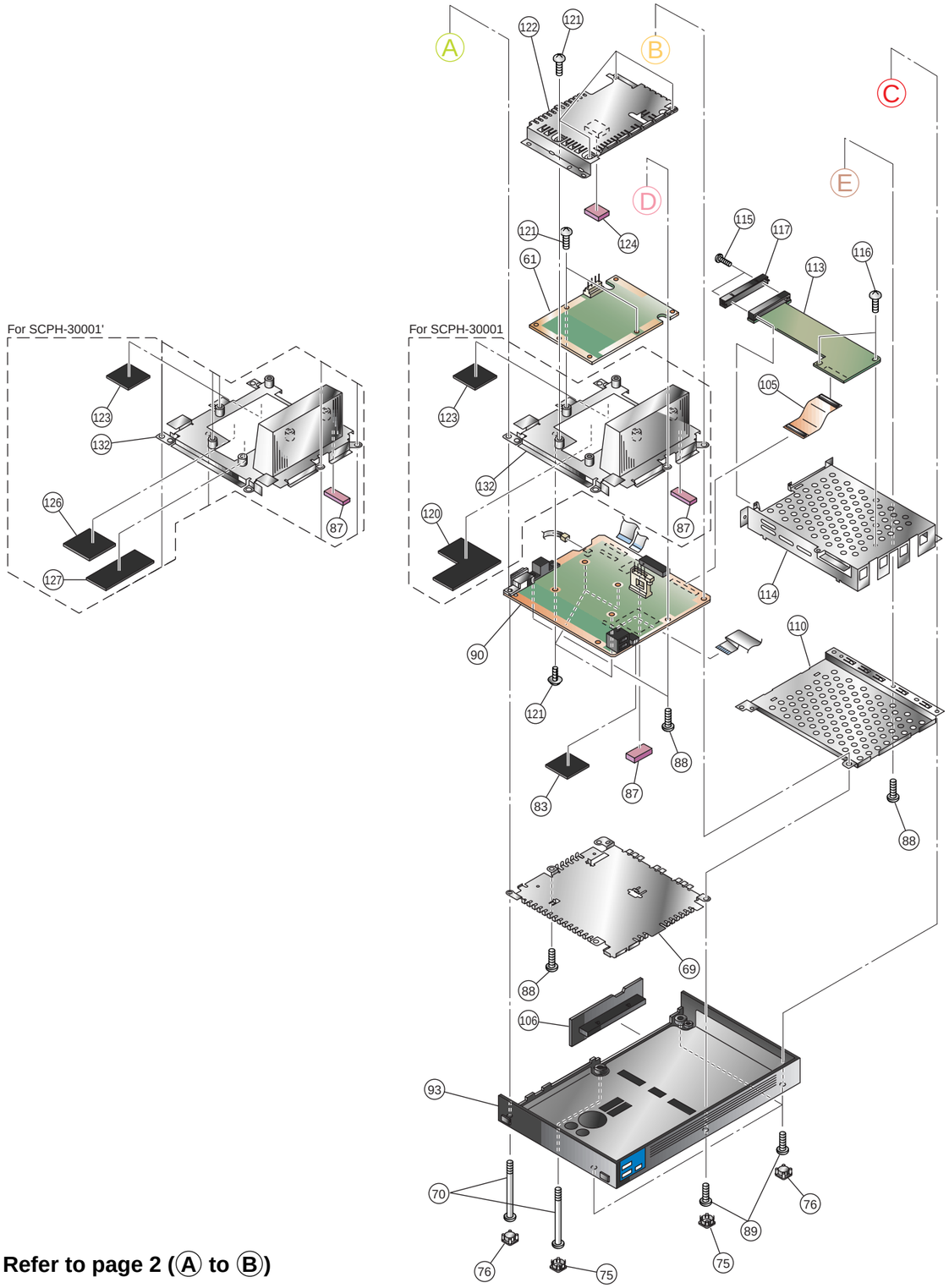

Refer to page 2 (Ⓐ to Ⓑ)

SWITCH, OVERALL AND MAIN BLOCK (2)

Ref-No.	Part No.	Description	Remark	Place code
61	1-528-174-41	BATTERY,LITHIUM(CR2032)		#25GD
69	3-064-824-□□	SHIELD (B)		#16
70	3-059-622-□□	SCREW (M3X54),HEAD TAPPING		#87
75	3-059-626-□□	COVER,SCREW		#22
76	3-059-627-□□	CAP		#22
83	3-060-388-□□	SHEET,FERRITE		#87
87	3-064-839-□□	SHEET (H),ELECTRIC HEAT		#87
88	3-325-679-21	SCREW,TAPPING +BV 3X12		#87
89	3-325-679-91	SCREW,TAPPING +BV 3X16		#87
90	A-6712-760-A	GH-004 MOUNT	for SCPH-30001(A-6785-053-A)	#25GH
90	A-6712-816-A	GH-005 MOUNT	for SCPH-30001'(A-6785-101-A)	#25GH
93	X-3951-097-□	COVER ASSY,LOWER		#87
105	1-680-147-□□	PWB,FP-324 FLEXIBLE		#12
106	X-3951-316-□	LID ASSY		#87
110	3-064-847-□□	SHIELD (LOWER)		#16
113	A-6712-780-A	GI-004 MOUNT		#25GI
114	X-3951-093-□	FRAME (UPPER)ASSY		#87
115	3-065-998-01	SCREW (M2X9),UNIT		#87
116	3-065-999-01	SCREW (M2X1.4),UNIT		#87
117	3-066-273-01	COVER, CONNECTOR		#25GI
120	3-059-652-01	SHEET(A),ELECTRIC HEAT	for SCPH-30001(A-6785-053-A)	#25GH
121	3-061-309-01	SCREW(M2x6),PAN		#25GI
122	3-064-833-0□	SHIELD(C)#25GD		
123	3-064-837-0□	SHEET(J),ELECTRIC HEAT		#25GH
124	3-066-011-0□	SHEET(M),ELECTRIC HEAT		#25GD
126	3-066-277-01	SHEET(P),ELECTRIC HEAT	for SCPH-30001'(A-6785-101-A)	#25GH
127	3-066-278-0□	SHEET(Q),ELECTRIC HEAT	for SCPH-30001'(A-6785-101-A)	#25GH
129	A-6712-761-A	GD-011 MOUNT	for SCPH-30001(A-6785-053-A)	#25GD
129	A-6712-817-A	GD-012 MOUNT	for SCPH-30001'(A-6785-101-A)	#25GD
132	X-3951-094-□	SHIELD(A)ASSY		#25GH
133	1-815-122-1□	CONNECTOR 4P		#25GH

Reproduction Prohibited

MD Block

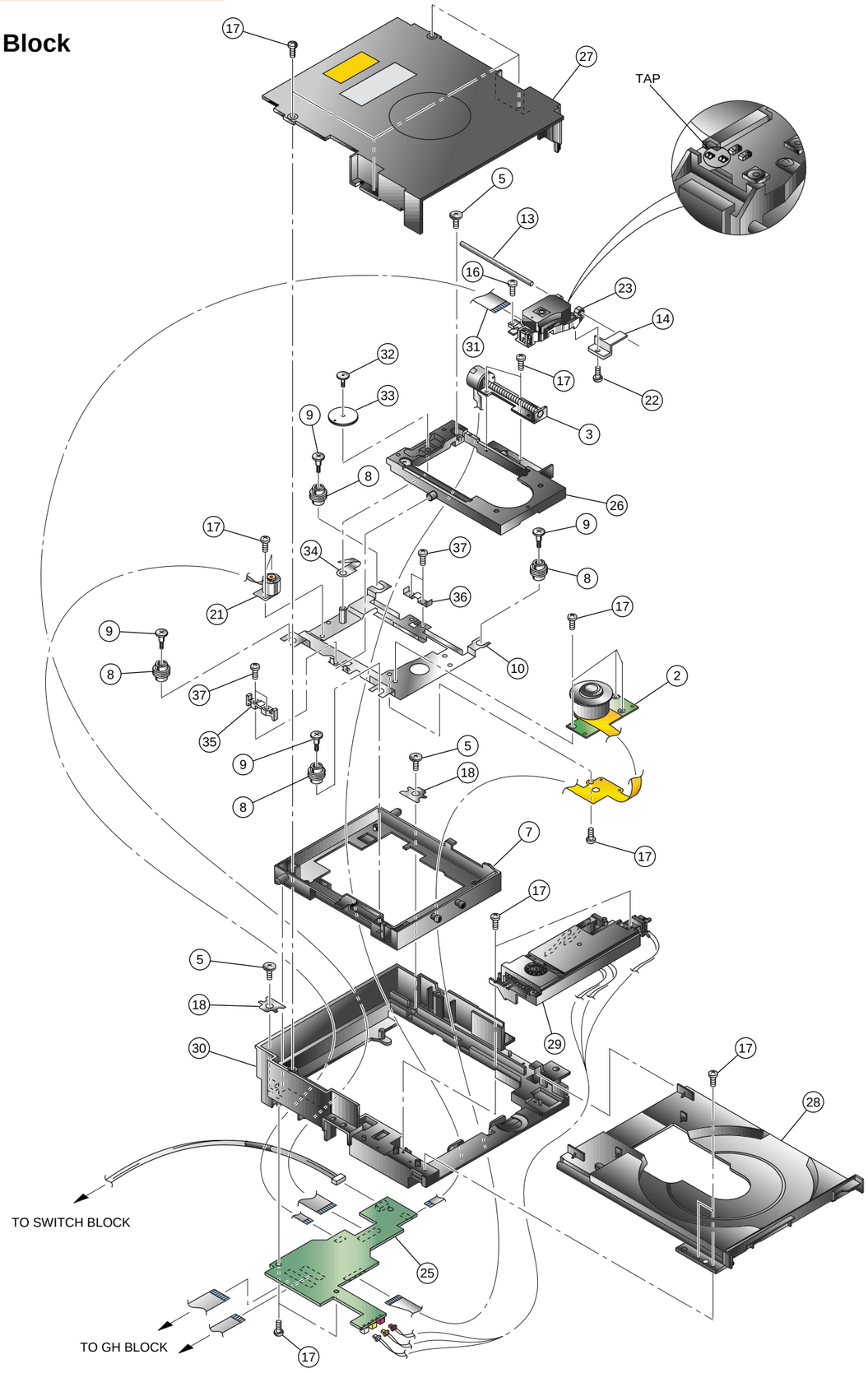

MD BLOCK

	Ref-No.	Part No.	Description	Remark	Place code
	2	1-763-610-□□	MOTOR, DC (SPINDLE)		#10SP
	3	1-763-639-□□	MOTOR, DC		#10
	5	3-059-845-01	SCREW (B2X6.5), SHAFT RETAINER		#10
	7	3-065-275-□□	FRAME, SUB		#10
	8	3-065-277-□□	INSULATOR		#10
	9	3-065-276-□□	SCREW, STEP		#10
	10	X-3951-151-□	CHASSIS ASSY, MAIN		#10
	13	3-059-854-0□	SHAFT, MAIN		#10
	14	3-059-855-0□	RACK		#10
	16	3-060-399-0□	SCREW, SKEW		#10
	17	3-060-400-01	TAPPING (B2X6.5)		#10
	18	3-065-281-□□	SHEET, SHAFT RETAINER		#10
	21	1-763-613-□□	MOTOR, DC (TILT)		#10
	22	3-062-728-01	0 PLATE 3 MAIN M2X3.2		#10
⚠	23	8-820-141-□□	DEVICE, OPICAL KHS-400B		#10OP
	25	A-6712-775-A	GM-041 MOUNT		#10
	26	X-3951-152-□	CHASSIS ASSY, SUB		#10
	27	X-3951-154-□	BRACKET ASSY, PULLEY		#10
	28	X-3951-153-□	TRAY ASSY		#10TR
	29	X-3951-156-□	BOX ASSY, GEAR		#10GB
	30	3-065-271-□□	FRAME, MAIN		#10
	31	1-680-370-□□	PWB, FLEXIBLE		#10
	32	3-065-279-□□	SCREW, CAM RETAINER		#10
	33	3-065-278-□□	CAM, TILT		#10
	34	3-065-280-□□	SPRING (TILT), PLATE		#10
	35	3-065-282-□□	GUIDE (L)		#10
	36	3-065-283-□□	GUIDE (R)		#10
	37	3-065-557-01	SCREW (M2X6.0)		#10
	38	3-065-274-0□	CAM, SLIDE		#10GB
	39	3-065-505-0□	BELT, RUBBER		#10GB

CAUTION

There are 2 taps behind Optical device for prevent the damage from static electricity.
these are usually shorted by solder when it shipping factory.
When You use the Optical device for repair, You have to open the 2 taps by melting solder.

In s case of the slide-cam (Ref.38) or the rubber belt (Ref.39) in the gear box assy broken, The slide-cam or The rubber belt should be exchanged itself, not Gear box assy.
When you exchange the feed DC-motor or Sub-chassis assy for repair, You have to grease Floil (SG474BY or a similar articles) up to Feed motor sledding gear and Sub-shaft.

Reproduction Prohibited

SECTION 3
BLOCK DIAGRAM

IC Ref No. : A side
IC Ref No. : B side

IOP
IC303
IOP
IC305
EDO RAM
WE
MD0-31
MA0-9
CAS0-3
EE+RDRAM
IC104
EMOTION ENGINE
SIF
CPU
GIF
TIMER
DMAC
VU0
VU1
SIO
IPU
INTC
128bit BUS
IC102
IC103
RDRAM (16MB)
DRAMC
IC101
CLOCK GENERATOR
X101 18.432MHz
GS+VIDEO
IC202
GRAPHICS SYNTHESIZER
IC205
RGB to YCrCB MATRIX
Mod
DAC
SYNC_GEN,HD0,1
CONTROL REGISTER
M-Bus Control Module
DIGITAL VIDEO ENCODER
IC206
ANALOG VIDEO ENCODER
COMPONENT
DIGITAL DATA
MODE0-2
CN201
AV MULTI OUT
COUT
YOUT
CVBS-OUT
BOUT/CbOUT/PbOUT
GOUT/YOUT
ROUT/CbOUT/PbOUT
AUL
AUR
HSYNC, VSYNC, CSSYNC, PAL/NTSC, CLOCK, RGBYC
ARED
AGEN
ABLU
RIN1
GIN1
BIN1
X202 54MHz
SPCLK
CONTROLLER 1 DATA
MEMORY CARD 1 DATA (Magic Gate)
CONTROLLER 2 DATA
MEMORY CARD 2 DATA (Magic Gate)
CN002
CN001, CN302
FRONT TERMINAL
AD0-31
/BE0-3
/RDAC
/WRAC
/RDY
/BREQ
/BGNT
DREQ0
DREQ1
DACK
/SGINT
/SINT
/SRST
MSCLK
PGCLK
GD0-63
GA0-6
CLKCG
CLKGC
/VLDCG
/VLDGC
/RDYCG
/RDYGC
GRW
/GACK
/GREQ
/GINT
RQ_A0-7/RQ_B0-7
DQA_A0-7/DQA_B0-7
DQB_A0-7/DQB_B0-7
CTMN
CTM
RO0-7
GO0-7
BO0-7
IC306
+2.5V
REF.V GEN.
VREF
X302 16.9344MHz
X301 24.576MHz
PLL
400MHz
PHY
USB PORTX2
i LINK
CN303
CN301
FL301, 302
(DATA+,DATA−)X2
TPA/TPAn/TPB/TPBn
IC501
HDD CONTROLLER
SCL
SDA
/DVRST
RT
HDD DATA (CD0-15)
HDD ADDRESS (CA0-25)
CONTROL
CN504
to HDD
AUX_OUT0-2
SPUDAT/SPUBCK/SPULRCK
SD0-15
SA0-15,24-26
SPUDI,SPUDATI
SPUBCKI,SPULRCKI
SPU2+ HDD+ DVD+ AUDIO
IC503, 506
BOOT ROM DVD ROM
SD0-15
SA0-21
/CS1,/CS2
SUB DATA BUS
SUB ADDRESS BUS
SYSTEM CONTROL BUS
PWRUP_EE,ESTBY/ERST
GSTBY,LCLK,/GRST
/POFF_RDY
SLEEP
PO_DISC
POFF_REQ
IC105
LOW POWER THERMOSTAT
T1;70.6°C
T2;76.7°C
TS_SI
IC101
RF AMP
CONTROL BUS
SF (DF, DR)
SR (DF, DR)
IC102
TILT DRIVER
TIL (TB±,TA±)
DECK CONTROL BUS
GM041
RF-AMP
CN100-105,107
PD1
PD2
A-F
CN604,605
FE
TE
CE
RFD0
CONTROL BUS
8-10
24-37
21-30
MD BLOCK
CD-ROM { PlayStation Format / PlayStation2 Format }
DVD VIDEO
DVD ROM { PlayStation2 Format }
AUDIO CD
IC700
SPINDLE CONTROL
H (±), H1 (±)
H2 (±), H3 (±)
A1, 2, 3
IC701,703
DRIVER
FORCUS/TRACKING/ SLIDE/LOADING
STD (±A, ±B)
TD (±), FD (±)
LOADING (±)
IC605
CD/DVD DSP
(FF,FR,TF,TR)DR
MCD0-7
MCA0-8
CONTROL BUS
SP_GAINSW/HFG/
SP_PS/SPDL/
SP_SB/SP_BR
STEP(±A,±B)
TRAY(CNT,DRVF,DRVR)
IC604
MECHA-CON
IC405
TIMER
EEP-SI
EEP-SO
EEP-SCK
EEP-CE
EEP ROM
X402 32.768MHz
IC406
GD-011
μCON+DSP
IC402
SYSTEM CONTROL
/POFF_RDY
SYS_SRST
TRAY_REQ
MCON_ACK
HDD_SW
SW1.5
SW1.9/SW2.5
SW5.1/SW3.3
SW12
FAN_PWM
X401 4MHz
DD+SYSTEM CONTROL
IC504
IC502
DRAM
SPMD0-15
SPMA0-9
WE
RAS
CAS
OE
SPU2
RST
DAD OUT
DABCK OUT
DALRCK OUT
DACCK
SPMUTE
IC517
AUDIO D/A CONVERTER
Q506
MUTE
Q505
/RST
CN501
DIGITAL OUT
OPTICAL DIGTAL OUT
SPU2+AUDIO+HDD
SYSTEM POWER REGURATOR/FAN DRIVE/USB DRIVE/HDD DRIVE
CN401
AC12V IN
GD-001
GH-004
DIG +1.2V X2 REG
IC404, Q401-404
(DC-DC CONVERTER)
DIG +3.5V/DIG +5V REG (USB DRIVE)
IC409, Q406-408 (DC-DC CONVERTER)
IC403 : EVER 3.5V REG
IC407, 408 : DIG +1.8V REG
IC410 : DIG +2.5V REG
IC411 : DIG +1.8V REG
IC412 : DIG +2.5V REG
IC413 : DIG +3.5V REG
IC414 : DIG +8V REG
Q409-411, 414 : HDD +5V/+12V REG
IC401 : SER +5V REG
IC403, Q407 : +8.5V (FAN DRIVE)
SYSTEM POWER SUPPLY
EVER3.5V
BT401
GREEN_ON
RED_ON
Q405
PWR_SW,/GREEN_ON,OP/CL_SW,/RED_ON
RF-AMP
CN108
TRAY_LED-ON
Q601
/BLUE_ON
POWER SW
OPEN/CLOSE SW
SW-350

Reproduction Prohibited

SECTION 4
PRINTED WIRING BOARDS AND SCHEMATIC DIAGRAMS

THIS NOTE IS COMMON FOR PRINTED WIRING BOARDS AND SCHEMATIC DIAGRAMS.

Note on Printed Wiring Boards :
- Through hole is omitted.
- ▭ : Pattern on the side which is seen.

Note on Schematic Diagram :
- Use caution when replacing chip parts.
  New parts must be attached after removal of chip.
  Be careful not to heat the minus side of tantalum capacitor, because it is damaged by the heat.
- All capacitors are in µF unless otherwise noted. pF : µµF 50 WV or less are not indicated except for electrolytics and tantalums.
- All resistors are in Ω and 1/4 W (Chip resisters : 1/10W) unless otherwise specified.
- Chip resistors are 1/8 W or 1/10 W unless otherwise noted.
  kΩ : 1000Ω, MΩ : 1000 kΩ.

Note : The components identified by mark ⚠ or dotted line with mark ⚠ are critical for safety. Replace only with part number specified.	**Note :** Les composants identifies par une marque ⚠ sont critiques pour la securite. Ne les remplacer que par une piece portant le nubero specifie.

Note on DC Power line :
- +12V (EVER, HDD) :
- +8.0V (CON) :
- +5.0V(ANA, DIG, HDD, SER, USB) :
- +3.5V (DIG, SER):
- +3.4V (CON) :
- +3.3V (EVER) :
- +2.5V (DIG) :
- +1.8V (DIG) :
- +1.7V (VC) :
- +1.5V (DIG) :

- IN : ➡
- OUT : ⇦
- Main Signal Line : ⇔, ➡

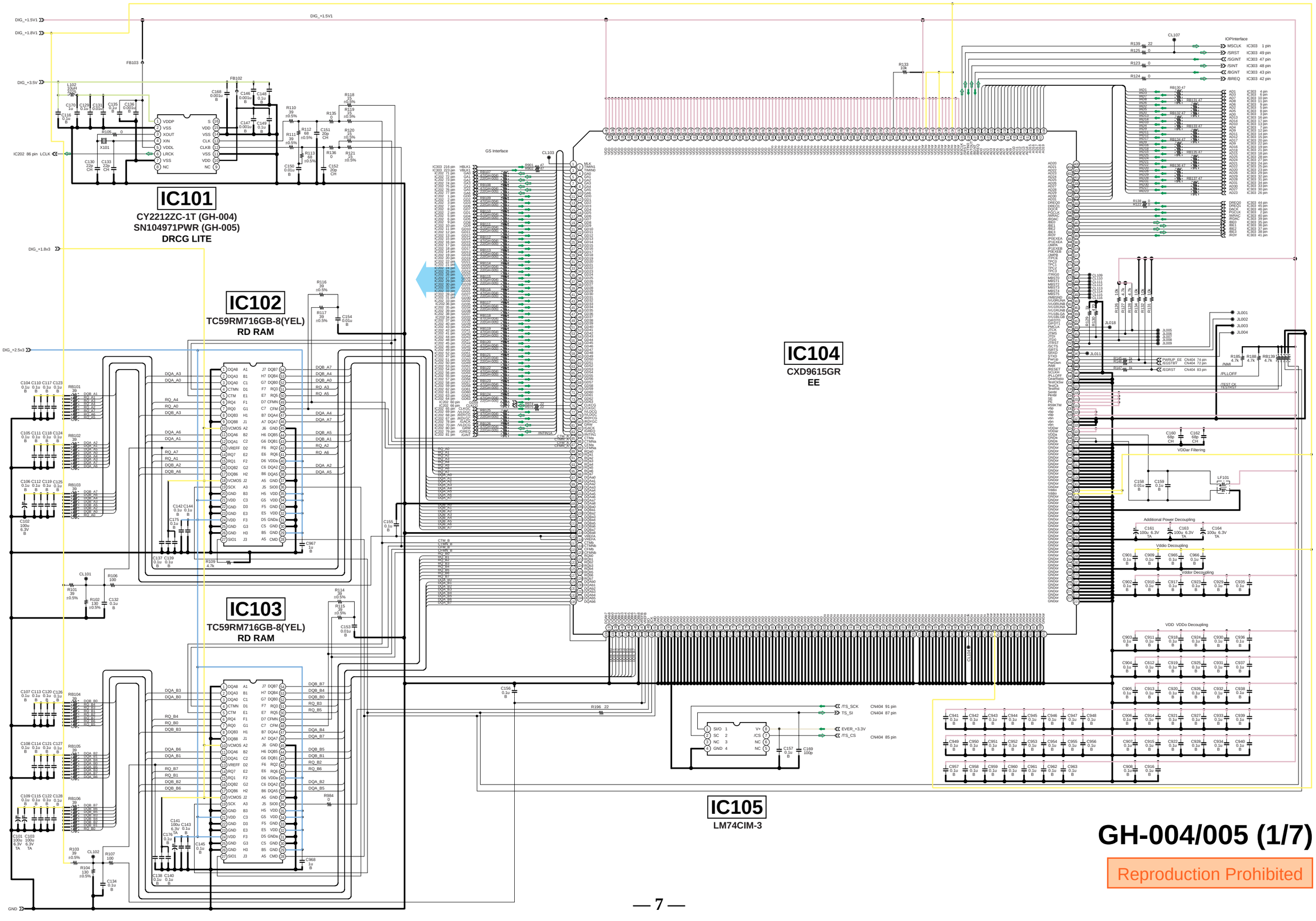

GH-004/005 (1/7)

Reproduction Prohibited

DIG_+1.8V1
GND
DIG_+2.5V1
DIG_-1.5V3

IC104 11 pin
IC104 74 pin

IC202
CXD2944GB
GS

IC208
SN74CBT1G125DCKR
OSC.

IC205
SC4472BAPBEB
DIGITAL VIDEO ENCODER

IC207
MC7BM05CDT
REG.

IC206
CXA3525R-T4
ANALOG VIDEO
ENCODER

IC209
MM3071CFBE
REG.

/DVRST IC501 10 pin
SCL IC501 12 pin
SDA IC501 13 pin

HBLK1 IC303 216 pin
VBLK1 IC303 223 pin
PCLK2 IC303 2217 pin

TO AV MULTI OUT

Addditional Power Decoupling

GH-004 (2/7)

Reproduction Prohibited

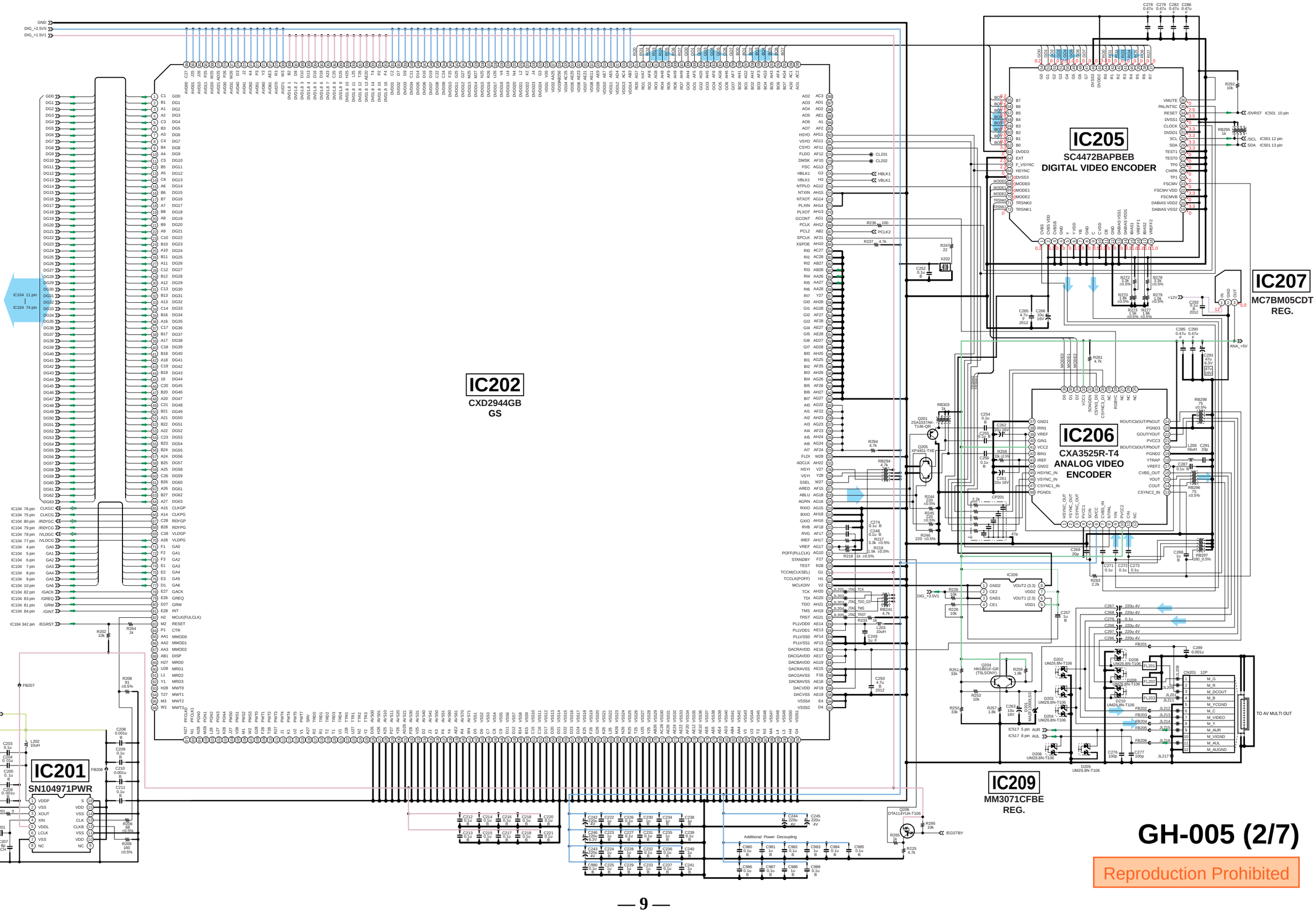

GH-005 (2/7)

Reproduction Prohibited

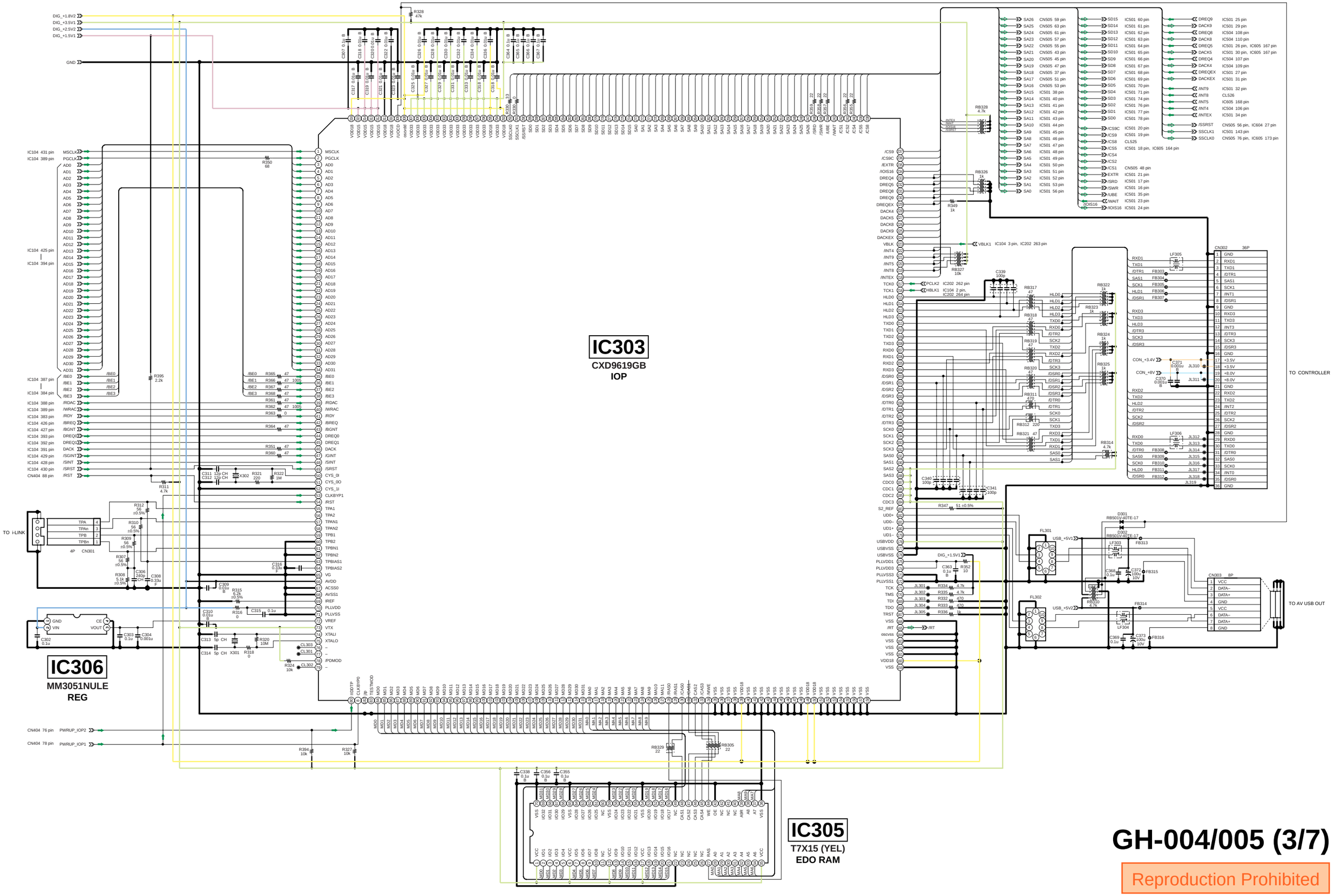

GH-004/005 (3/7)

Reproduction Prohibited

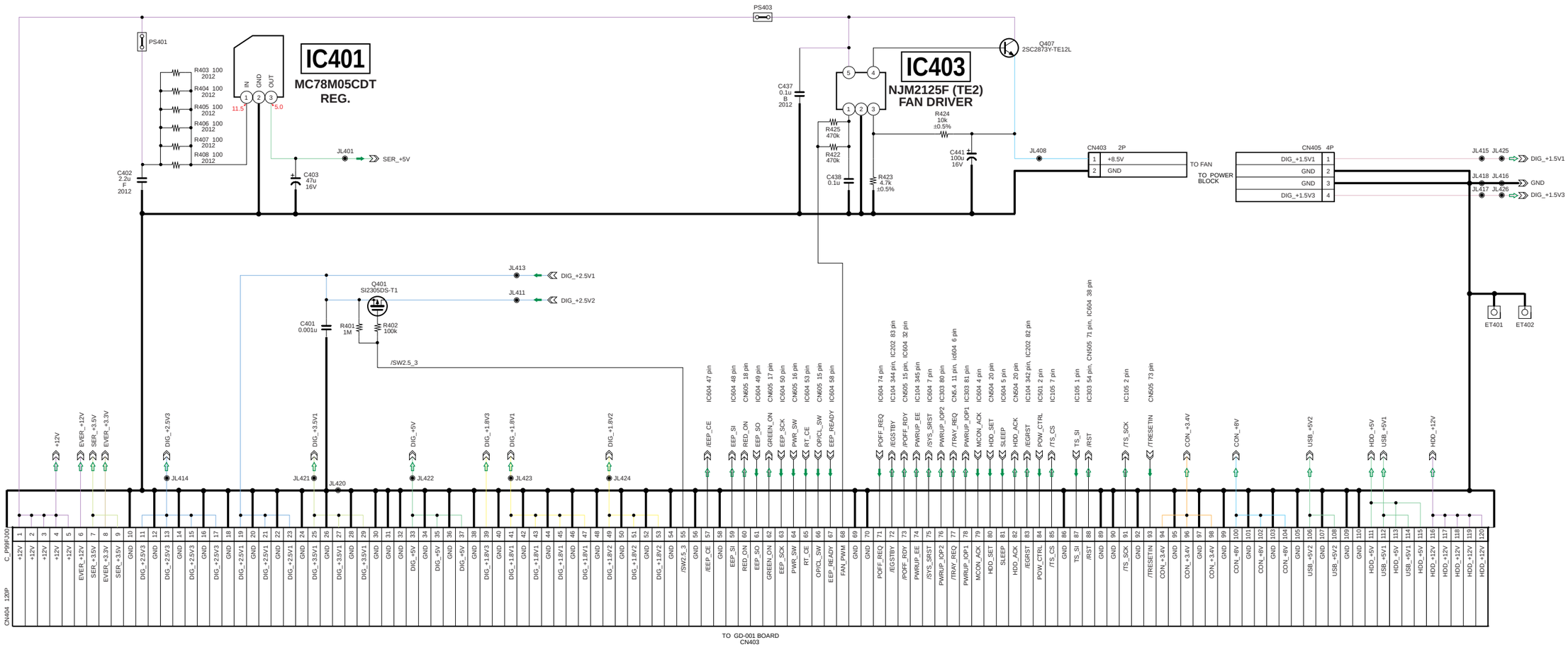

GH-004/005 (4/7)

Reproduction Prohibited

IC503,IC506 : for GH-004
IC505,IC518,C543,C526,R527 : for GH-004-64

IC518
TC7WB125FK

IC503
MR27V3202E-19TPZ020
BOOT ROM

IC506
MR27V3202E-20TPZ020
DVD ROM

IC502
TC5364200
DRAM

IC504
CXD2942AR
SPU2

IC505
TC5364200
DVD/BOOT ROM

IC501
CXD9611R
HDD CONTROLLER

IC517
CS4335-KS
AUDIO DUC

Reproduction Prohibited

IC602
NJM2904V(TE2)

IC603
NJM2100V(TE2)

IC607
TC7S66FU(TE85R)

IC606
TC7S66FU(TE85R)

IC605
CXD1869AQ
CD/DVD DSP

IC604
CXP102064-101R-T6
MECHA-CON

for GH-005

TO GM-041 BOARD CN106

TO GM-041 BOARD CN109

GH-004/005 (6/7)

Reproduction Prohibited

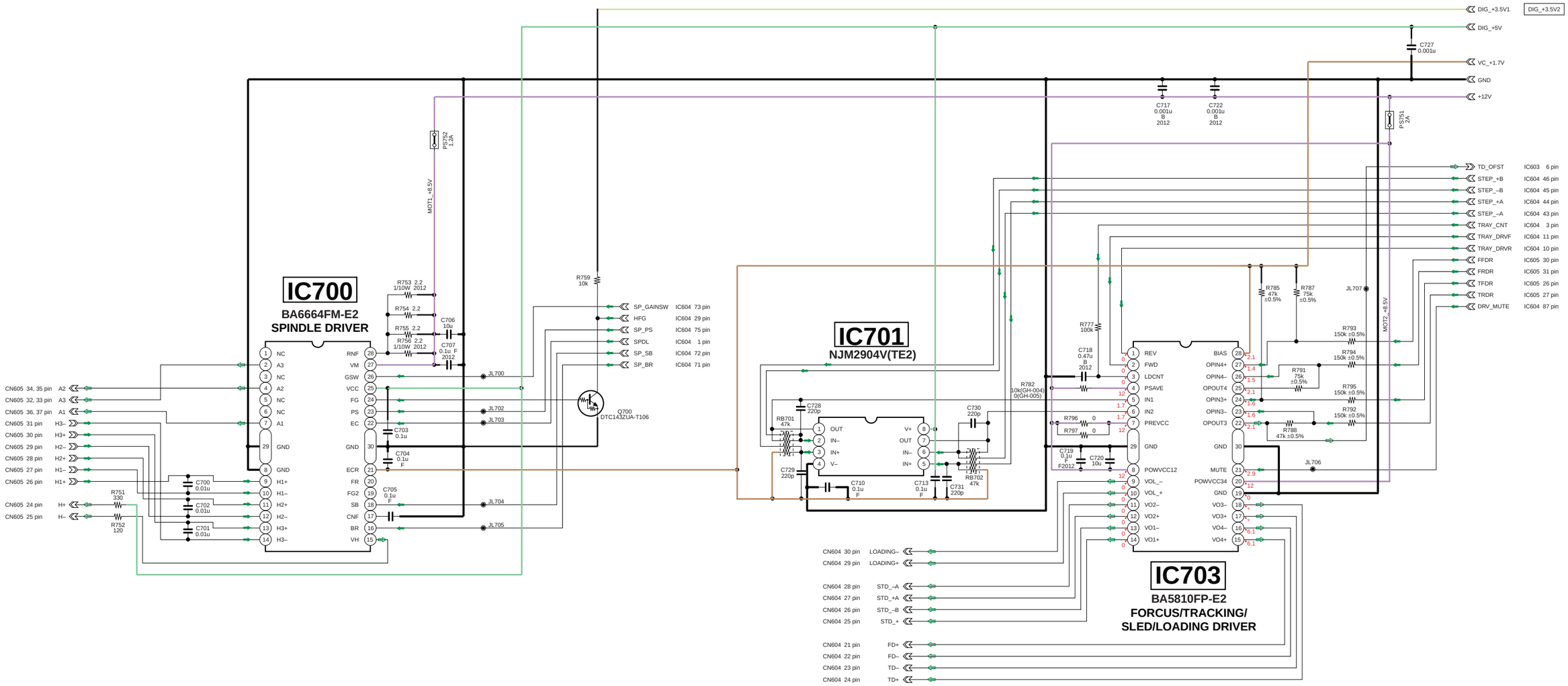

GH-004/005 (7/7)

Reproduction Prohibited

for GH-004-64

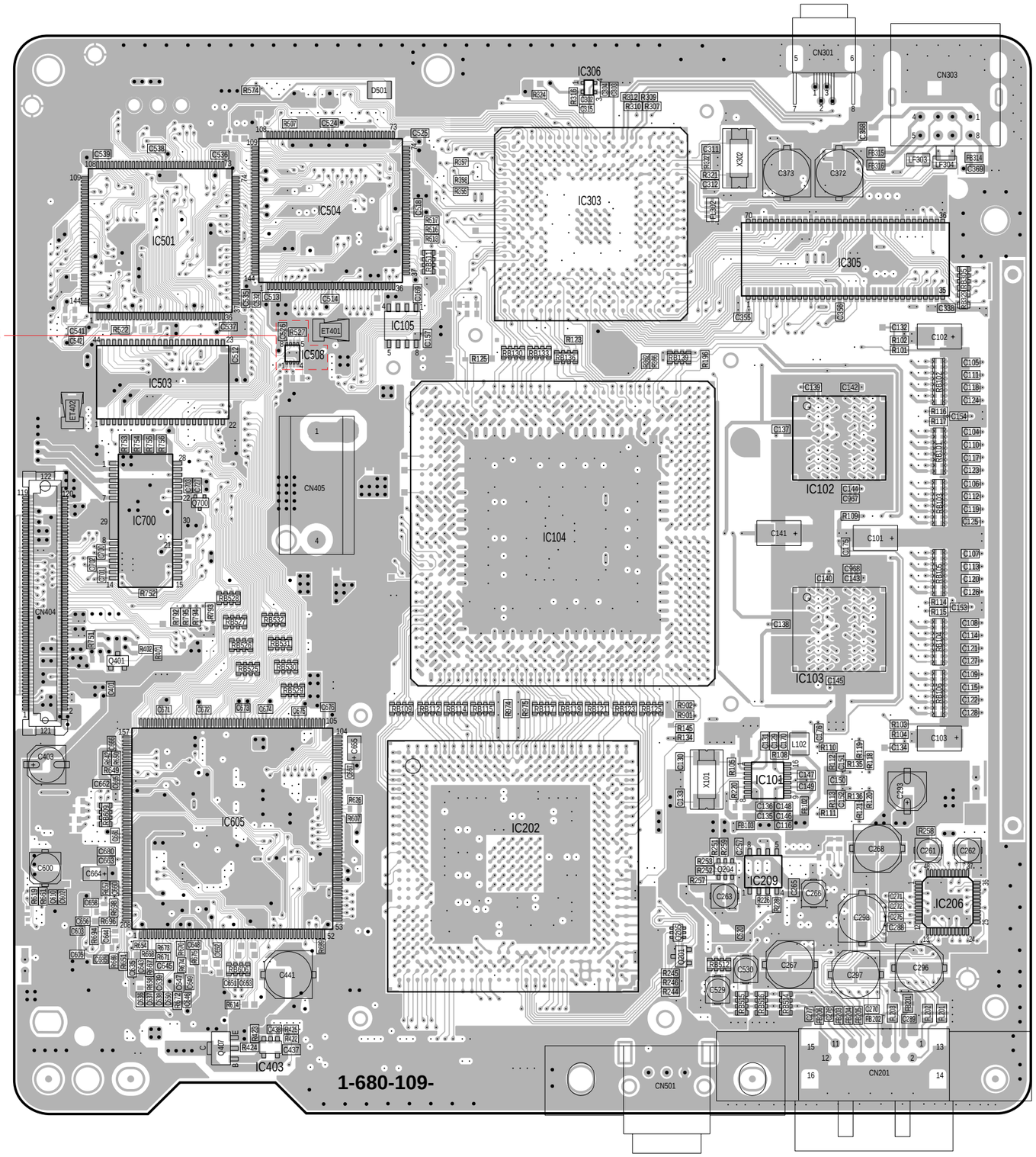

GH-004

A side

Reproduction Prohibited

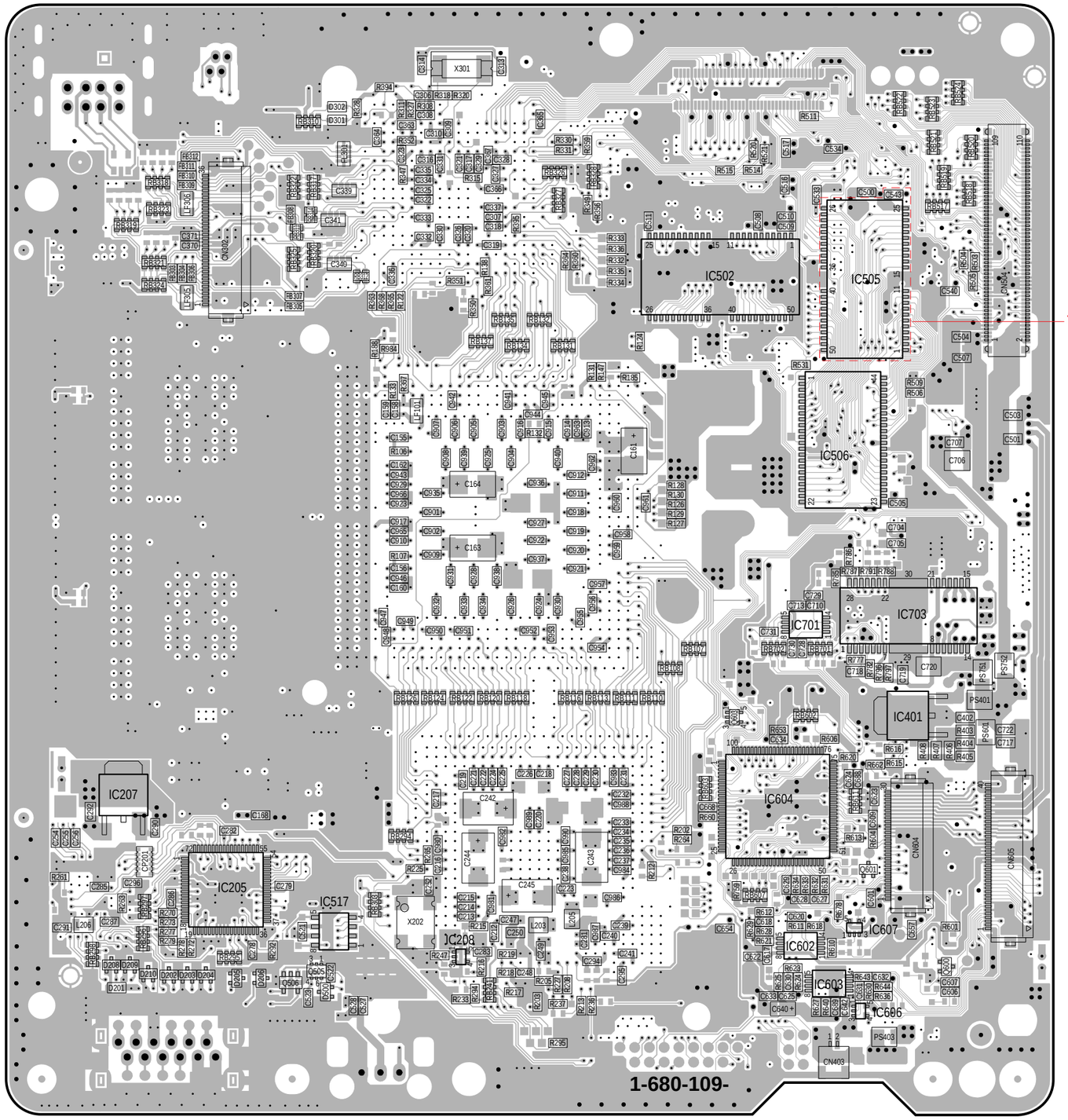

GH-004

B side

Reproduction Prohibited

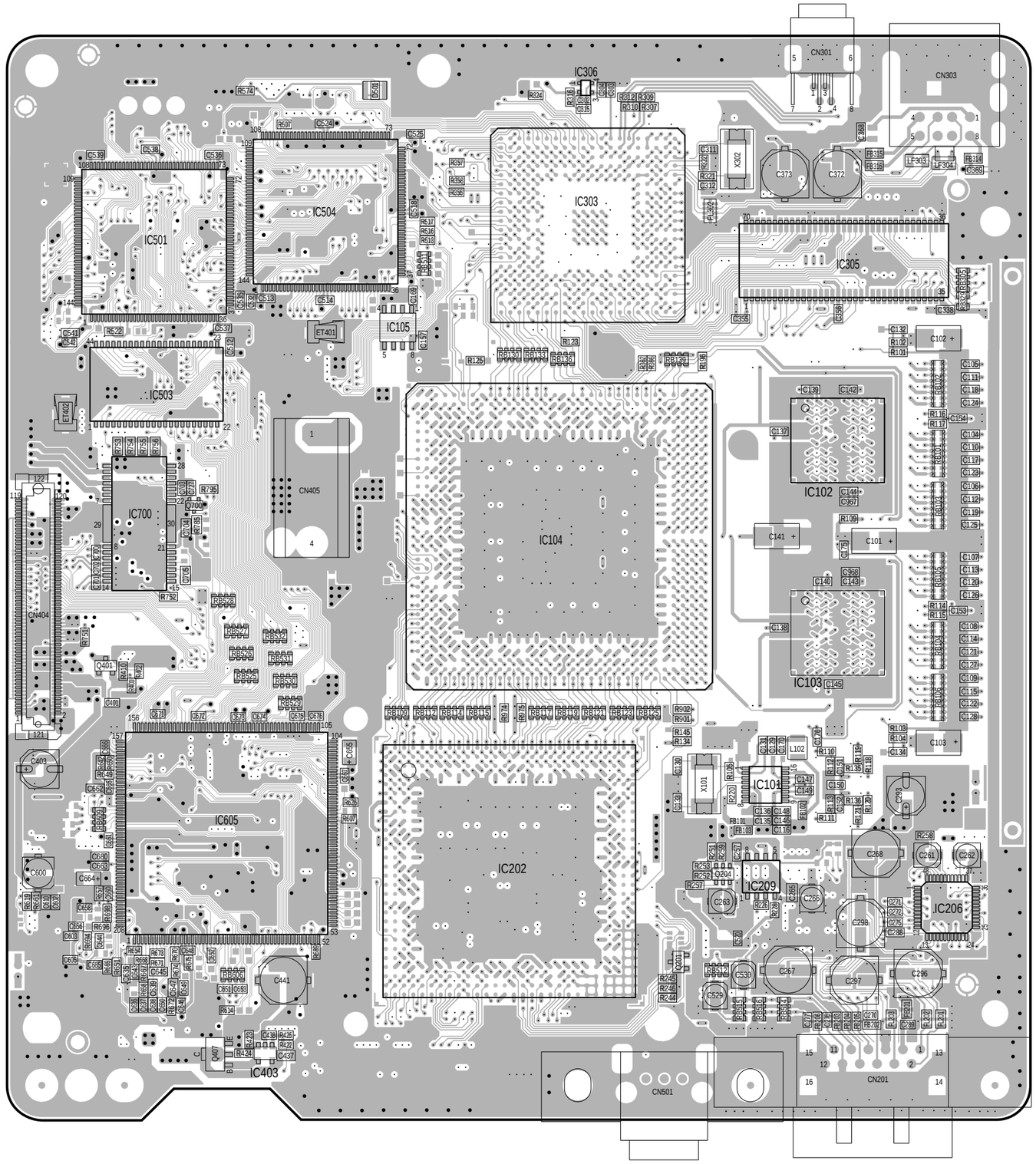

GH-005

A side

Reproduction Prohibited

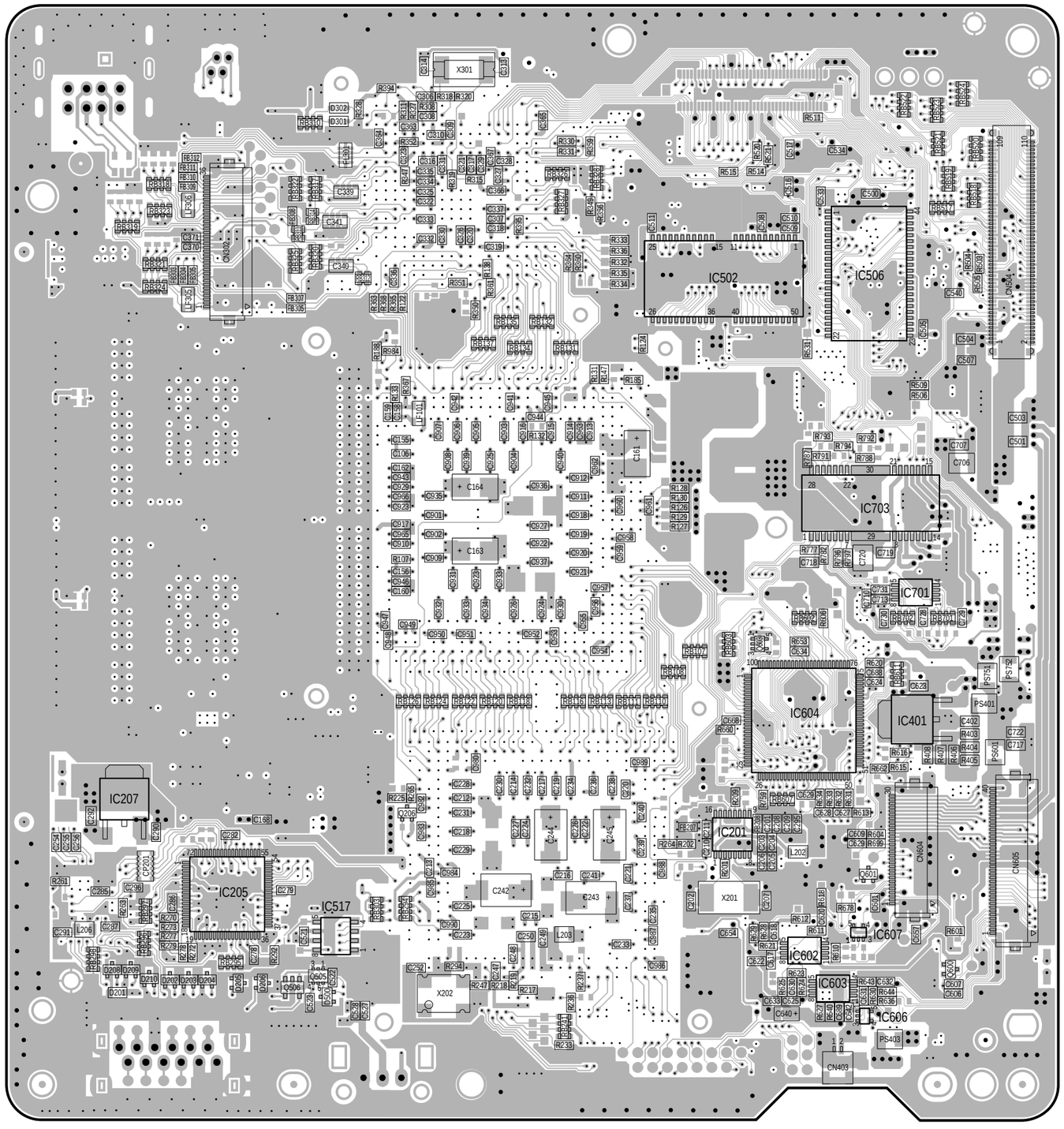

GH-005

B side

Reproduction Prohibited

IC401
S-80769SN-JO-T2
12V REG.

IC403
MM1537DFBE
RESET

IC405
RS5C348A-E2
TIMER

IC406
BR9080F-E2
EEPROM

IC402
TMP87C807U-1V33
SYSCON

IC409
SN104809DBTR

IC410
SI-3026LSA-TL
DIG2.5V3 REG.

IC411
MM3031J
DIG1.8V REG.

IC412
SI-3025LSA-TL
DIG2.5V1 REG.

IC413
SI-3034LSA-TL
SER3.5V REG.

IC414
TA7808F(TE16L)
CON8V REG.

IC404
SN104809DBTR

IC407
PQ01BEZ01ZP
DIG1.8V2 REG.

IC408
PQ070XZ01ZP
DIG1.8V1 REG.

TO POWER BLOCK

TO AC/DC

TO GH-004/GH-005 BOARD CN404

TO GH-004

GD-011

Reproduction Prohibited

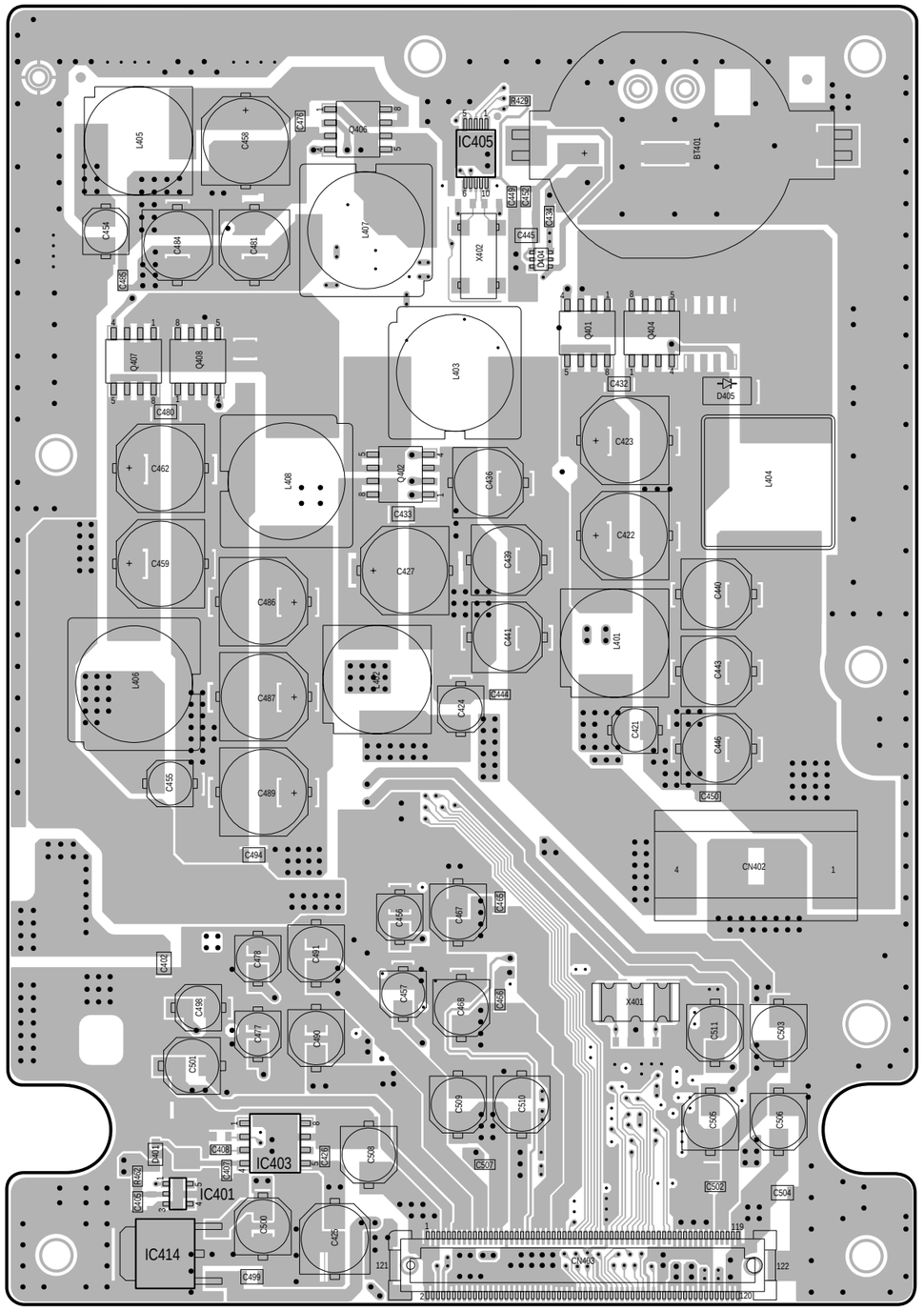

GD-011

A side

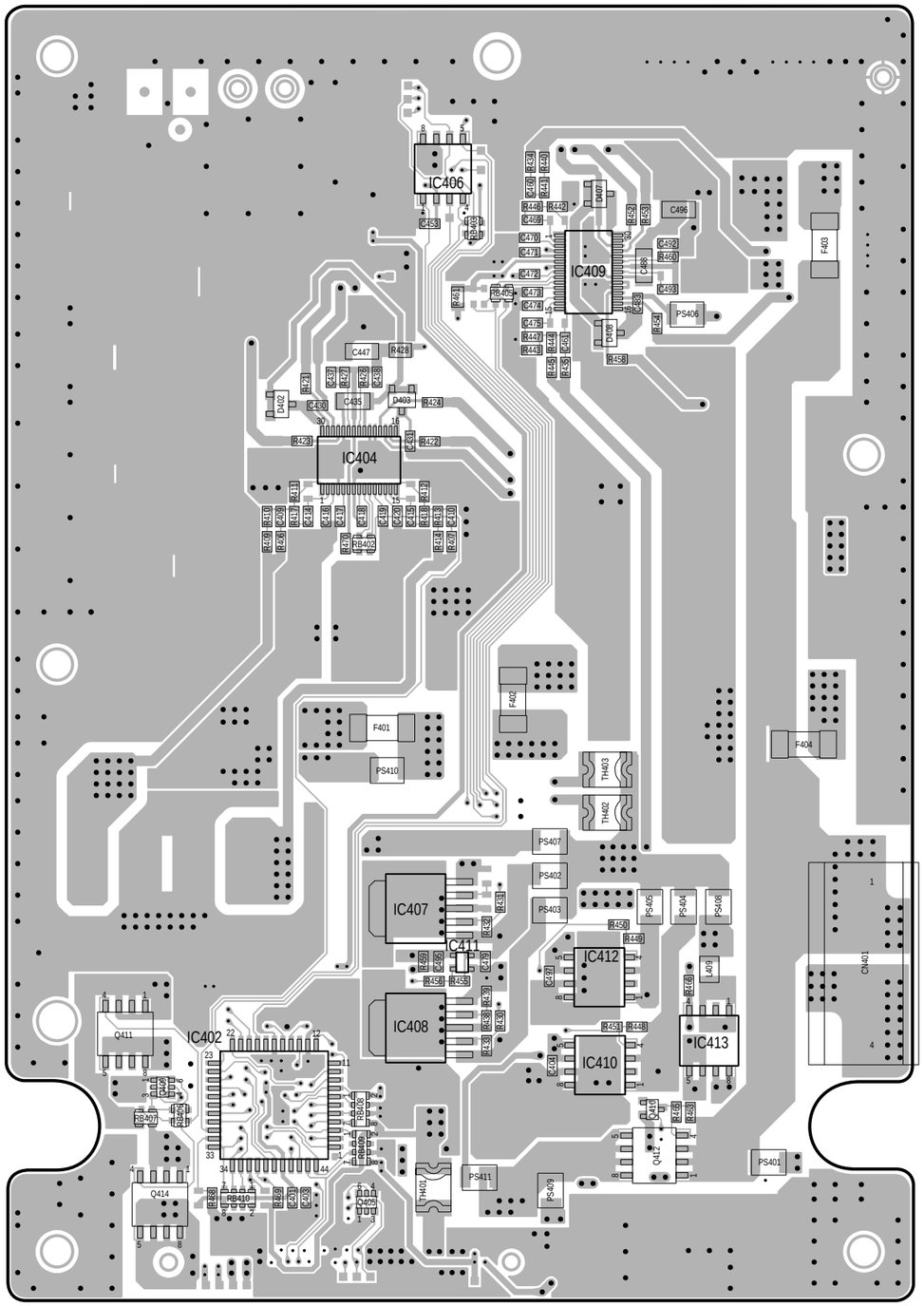

GD-011

B side

Reproduction Prohibited

IC403
MM1537DFBE
RESET

IC401
S-80769SN-JO-T2
12V REG.

IC405
RS5C348A-E2
TIMER

IC406
BR9080F-E2
EEPROM

IC402
TMP87C807C
SYSCON

IC409
SN104809DBTR

IC410
SI-3026LSA-TL
DIG2.5V3 REG.

IC413
SI-3034LSA-TL
SER3.5V REG.

IC411
MM3031J
DIG1.8V REG.

# IC414
TA7808F(TE16L)
CON8V REG.

IC404
SN104809DBTR

IC407
PQ01BEZ01ZP
DIG1.8V2 REG.

IC408
PQ070XZ01ZP
DIG1.8V1 REG.

TO POWER BLOCK

TO GH-004/GH-005 BOARD CN404

TO GH-004

3.53V
5.13V
1.8V
2.6V
1.85V
2.65V
1.71V

Reproduction Prohibited

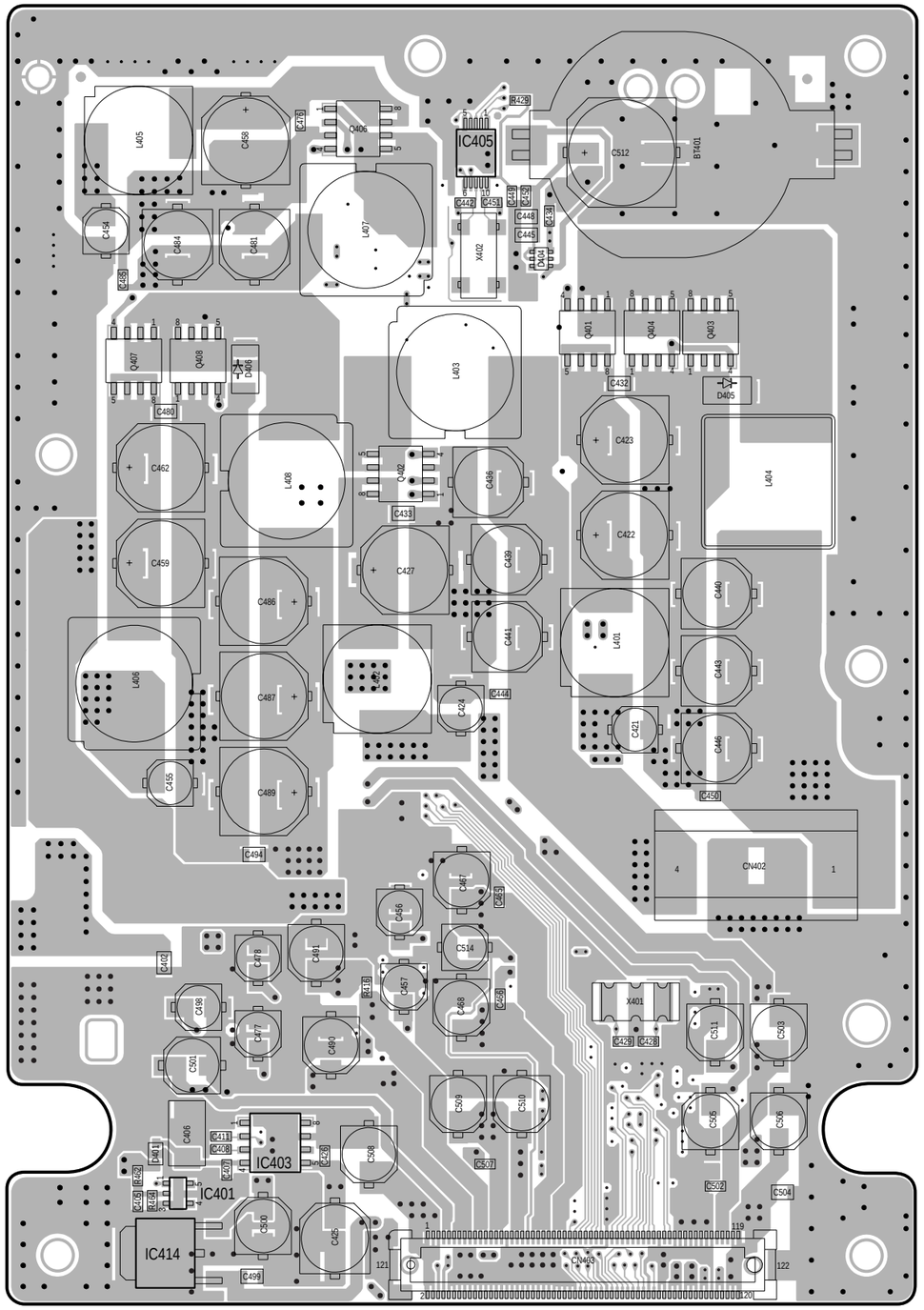
IC405
IC403
IC401
IC414
CN402
CN403
X402
X401
L405
L407
L403
L408
L404
L401
L406
Q407
Q408
Q401
Q404
Q403
Q402
D406
D405
C458
C454
C484
C481
C512
C462
C459
C486
C487
C489
C455
C427
C423
C422
C421
C440
C443
C446
C441
C439
C486
C433
C480
C432
C494
C499
C450
C444
C445
C448
C449
C451
C442
C438
C476
C429
C428
C418
C491
C498
C477
C490
C501
C456
C457
C468
C514
C509
C510
C505
C506
C503
C502
C504
C507
C508
C406
C411
C408
C407
C428
C429
C430
C431
C432
C433
C434
C435
C436
C437
C438
C439
C440
C441
C442
C443
C444
C445
C446
C447
C448
C449
C450
C451
C452
C453
C454
C455
C456
C457
C458
C459
C460
C461
C462
C463
C464
C465
C466
C467
C468
C469
C470
C471
C472
C473
C474
C475
C476
C477
C478
C479
C480
C481
C482
C483
C484
C485
C486
C487
C488
C489
C490
C491
C492
C493
C494
C495
C496
C497
C498
C499
C500
C501
C502
C503
C504
C505
C506
C507
C508
C509
C510
C511
C512
C513
C514
R401
R402
R403
R404
R405
R406
R407
R408
R409
R410
R411
R412
R413
R414
R415
R416
R417
R418
R419
R420
R421
R422
R423
R424
R425
R426
R427
R428
R429
R430
R431
R432
R433
R434
R435
R436
R437
R438
R439
RB401
RB402
RB403
RB404
RB405
RB406
RB407
RB408
RB409
RB410
RB411
RB412
RB413
RB414
RB415
RB416
RB417
RB418
RB419
RB420
RB421
RB422
RB423
RB424
RB425
RB426
RB427
RB428
RB429
RB430
RB431
RB432
RB433
RB434
RB435
RB436
RB437
RB438
RB439
RB440

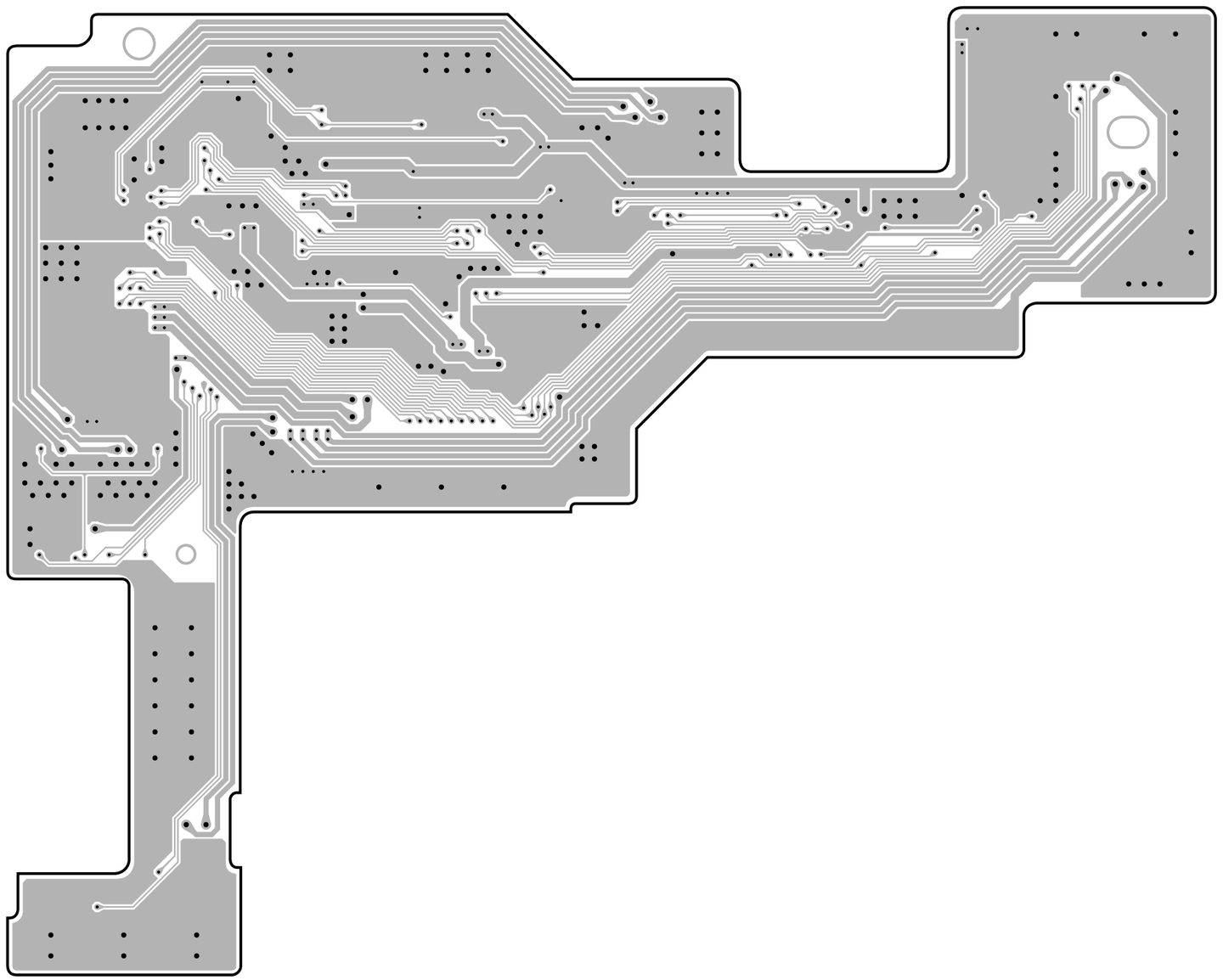

GM-041
A side

Reproduction Prohibited

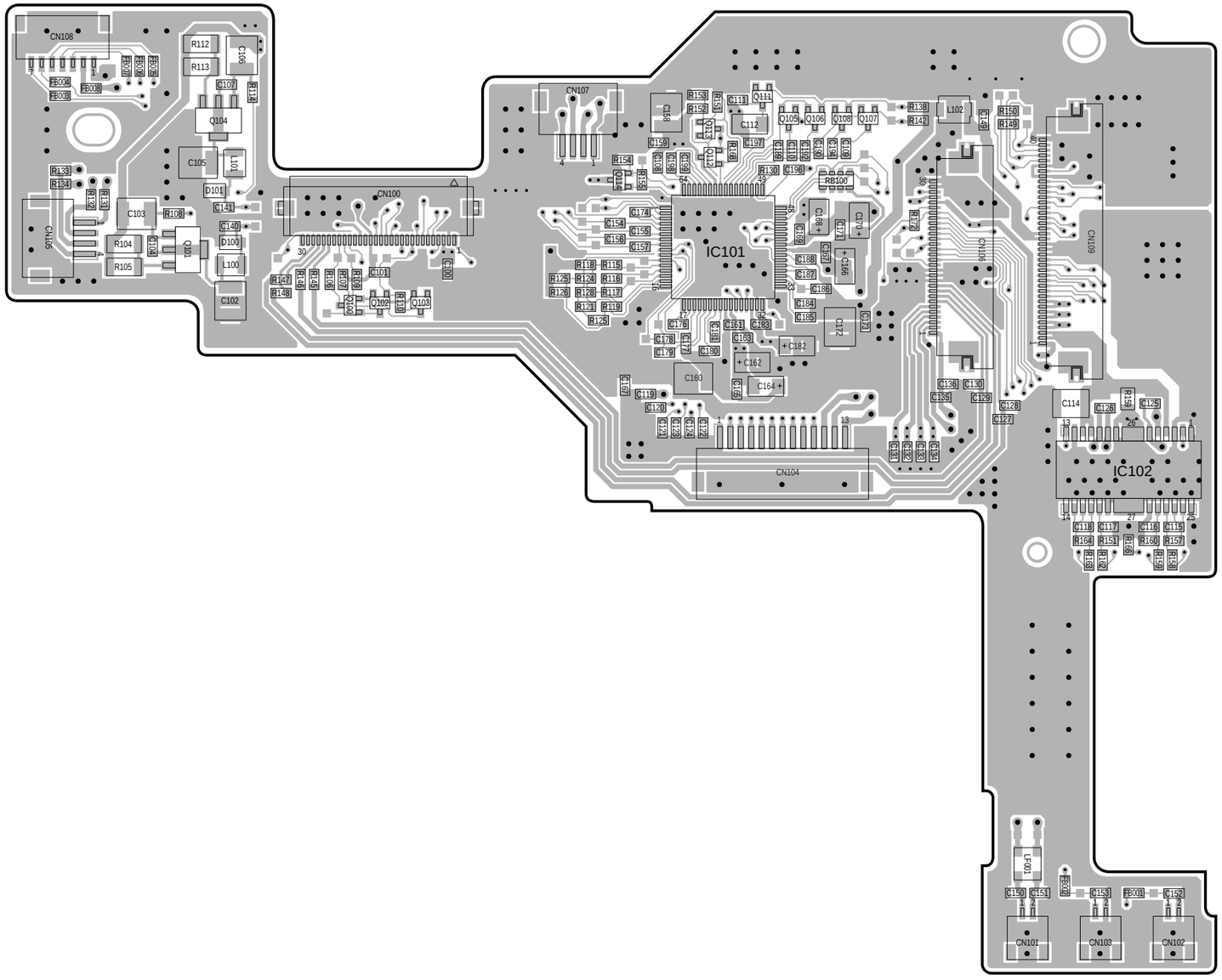

GM-041

B side

Reproduction Prohibited

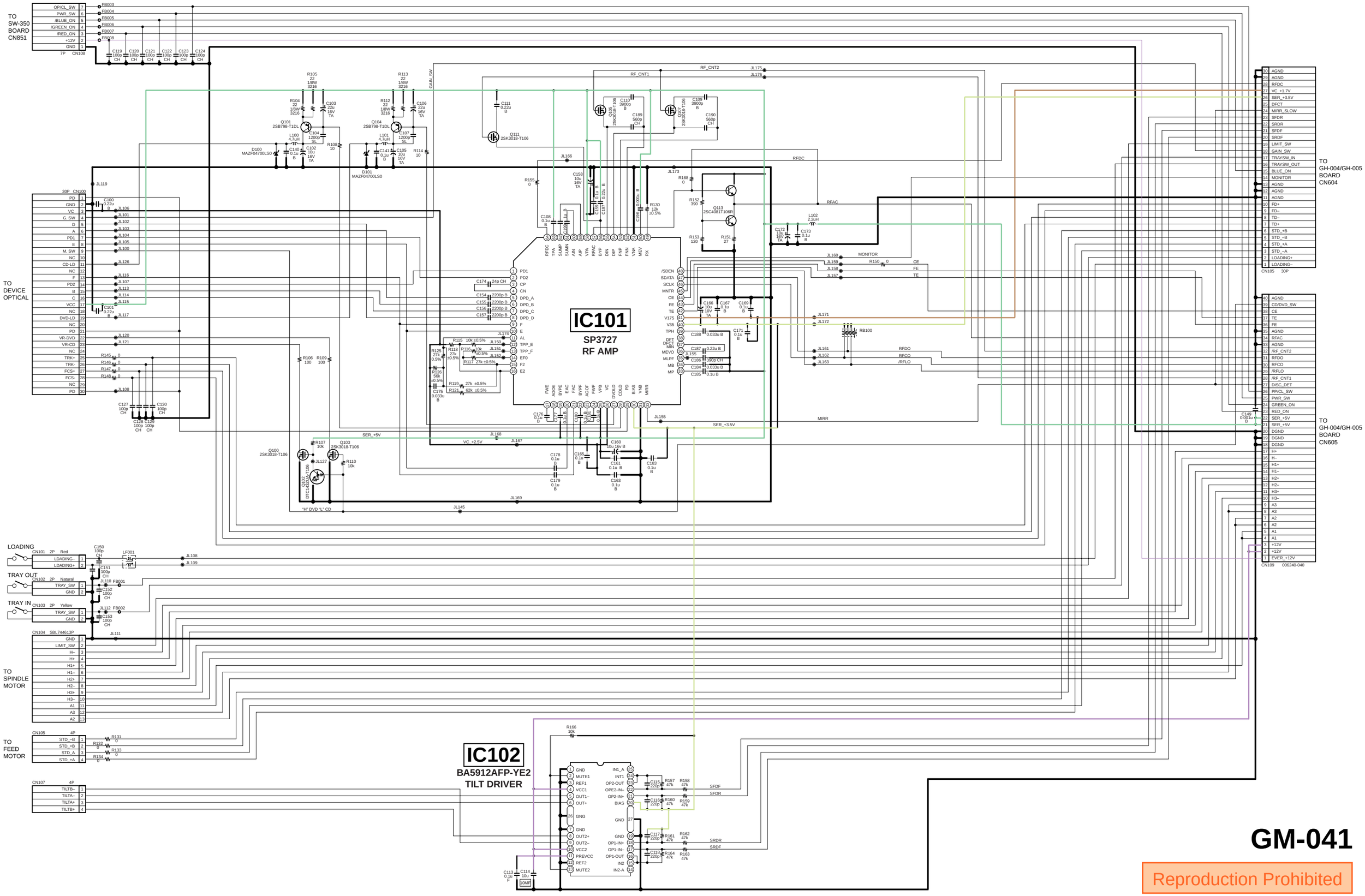

GM-041

Reproduction Prohibited

GI side

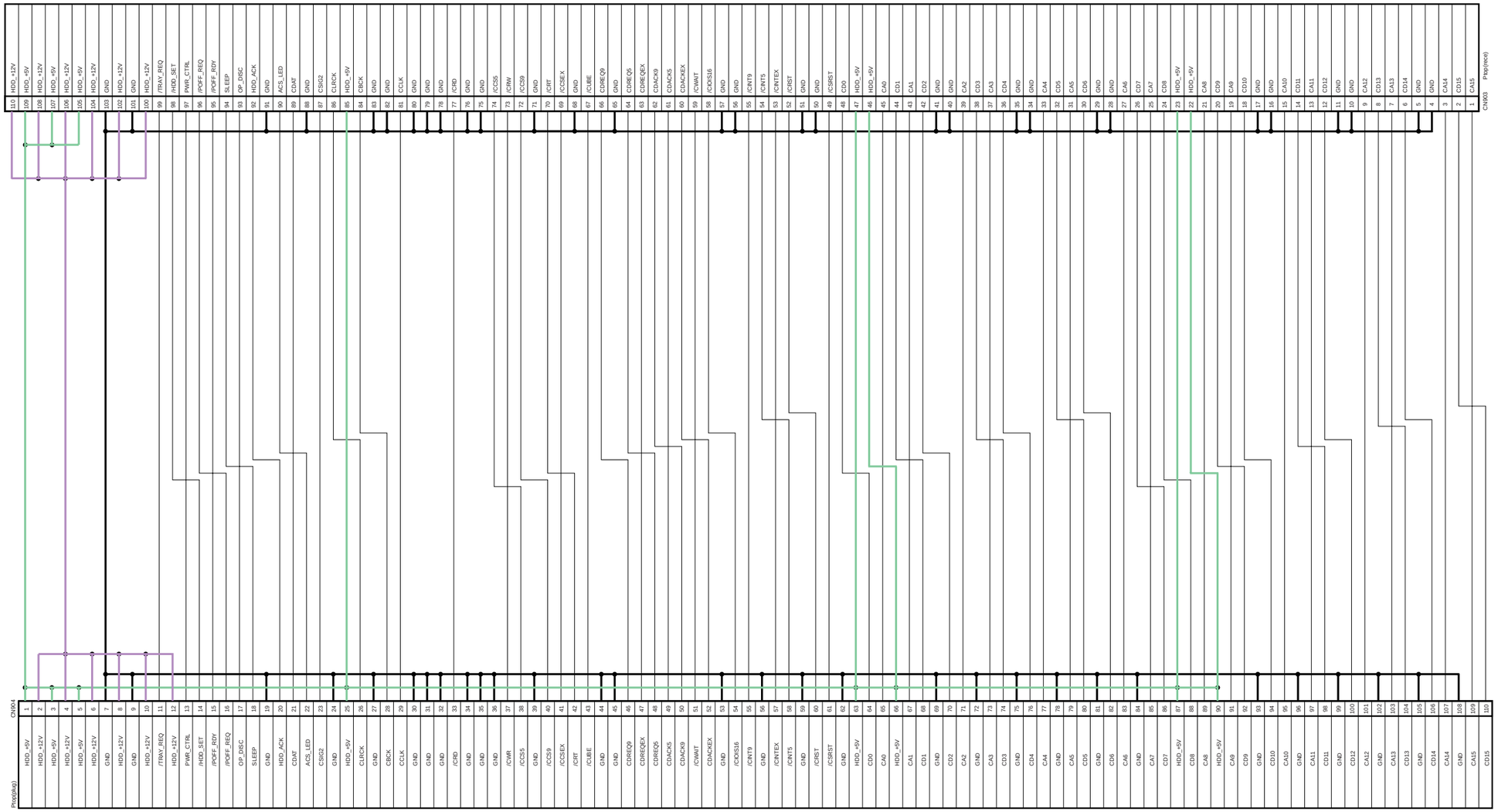

GH side

GI-004

Reproduction Prohibited

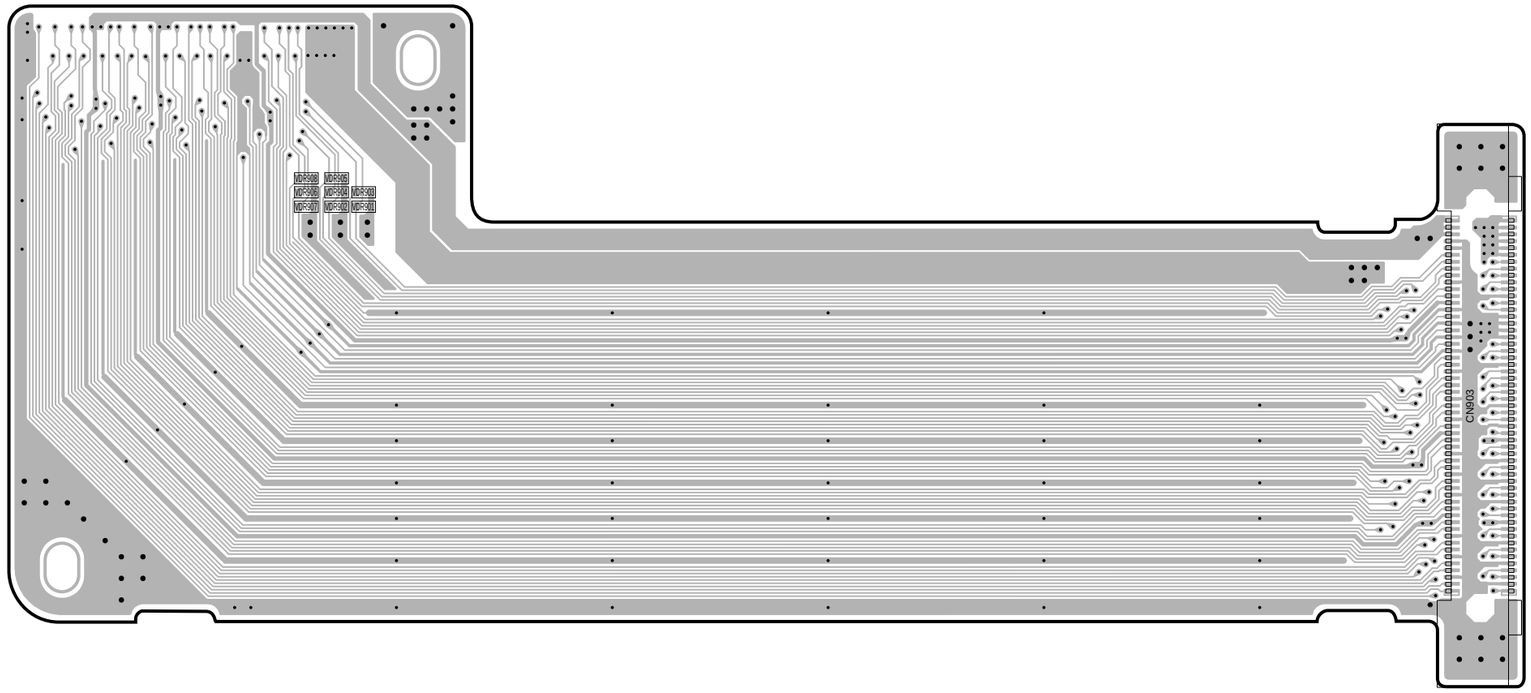

GI-004

A side

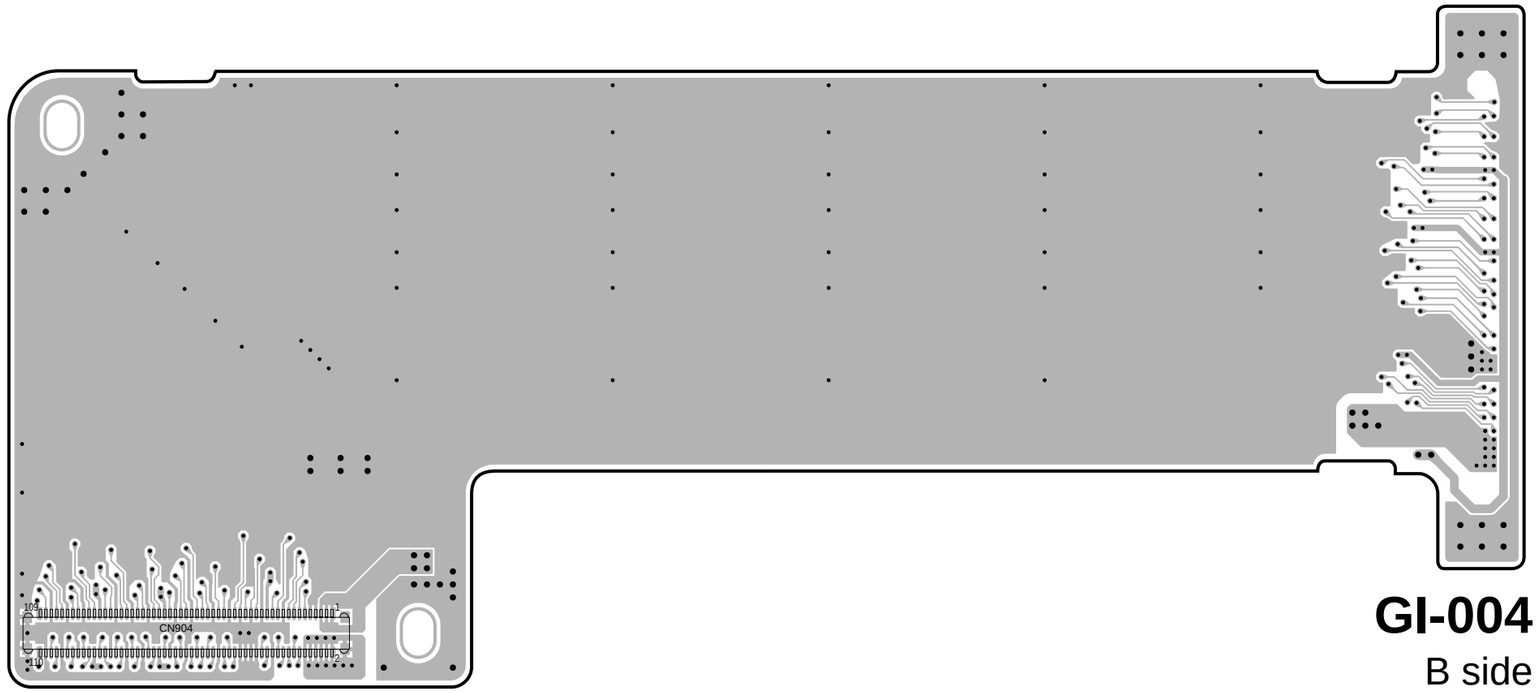

GI-004

B side

Reproduction Prohibited

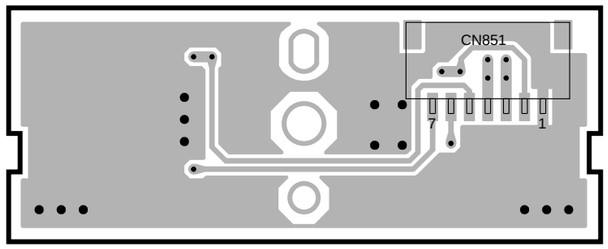

SW-350

A side

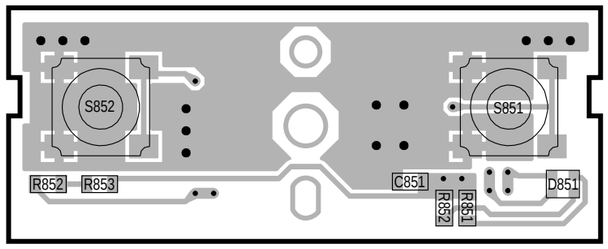

SW-350

B side

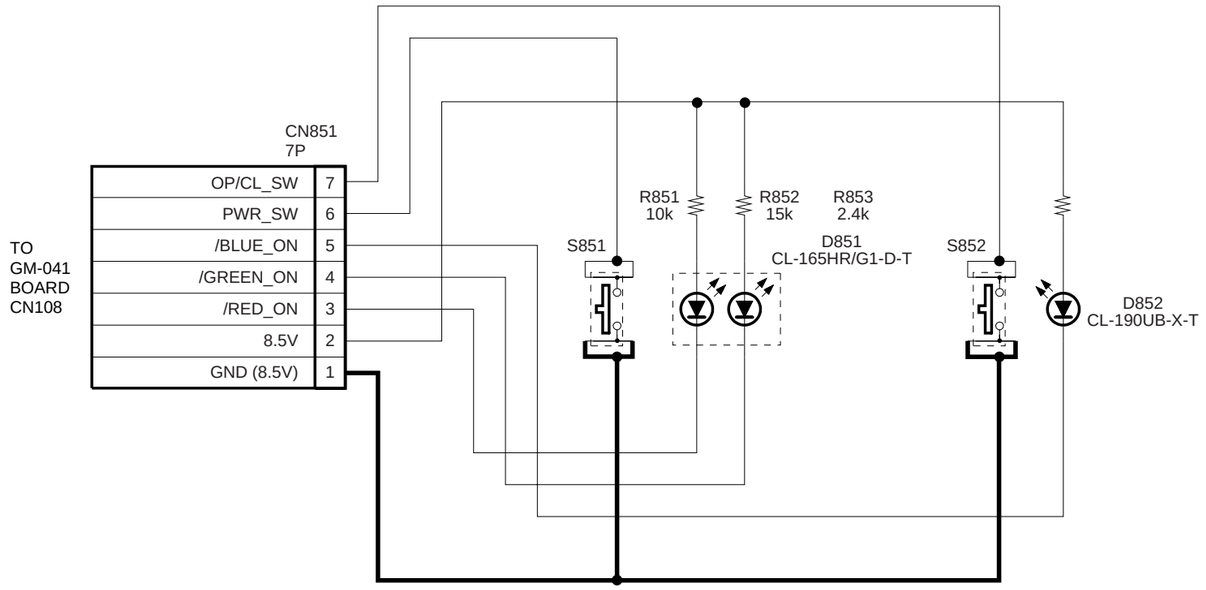

SW-350

Reproduction Prohibited

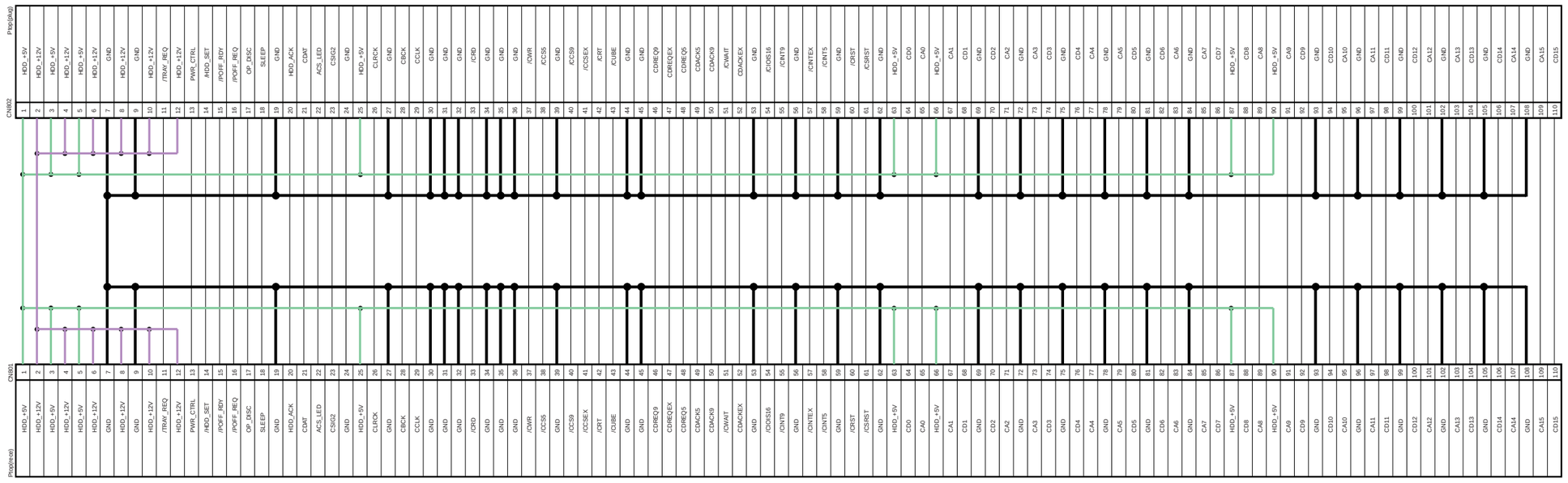

TO HARD DISK DRIVER

FREKI

Reproduction Prohibited

Reproduction Prohibited

IC BLOCK DIAGRAMS

CY2212ZC (IC101)

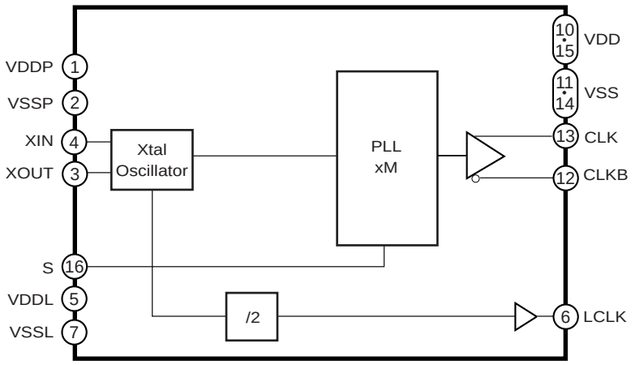

BA5912AFP-YE2 (IC102) [for GM Board]

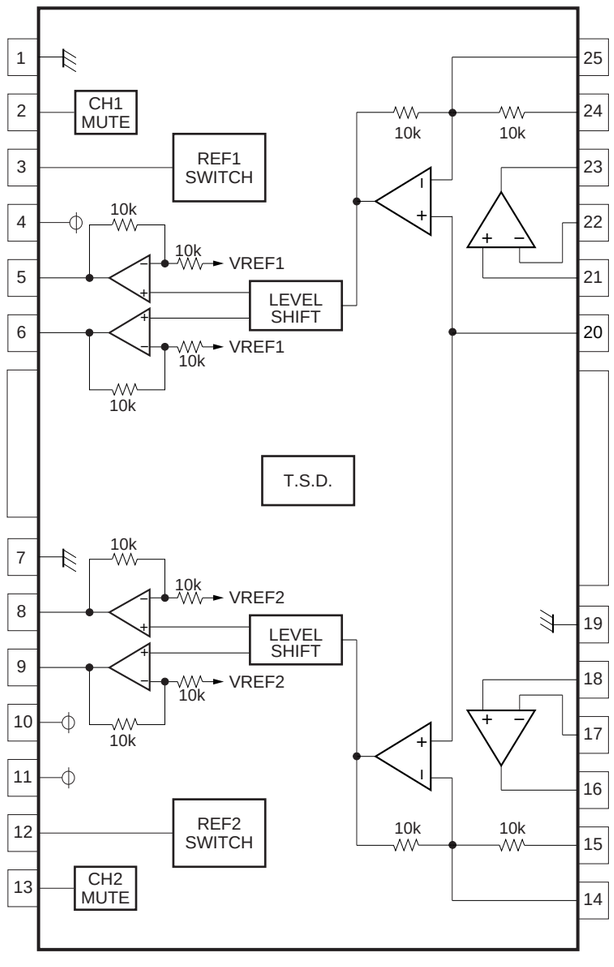

TC59RM716GB-8 (IC103)

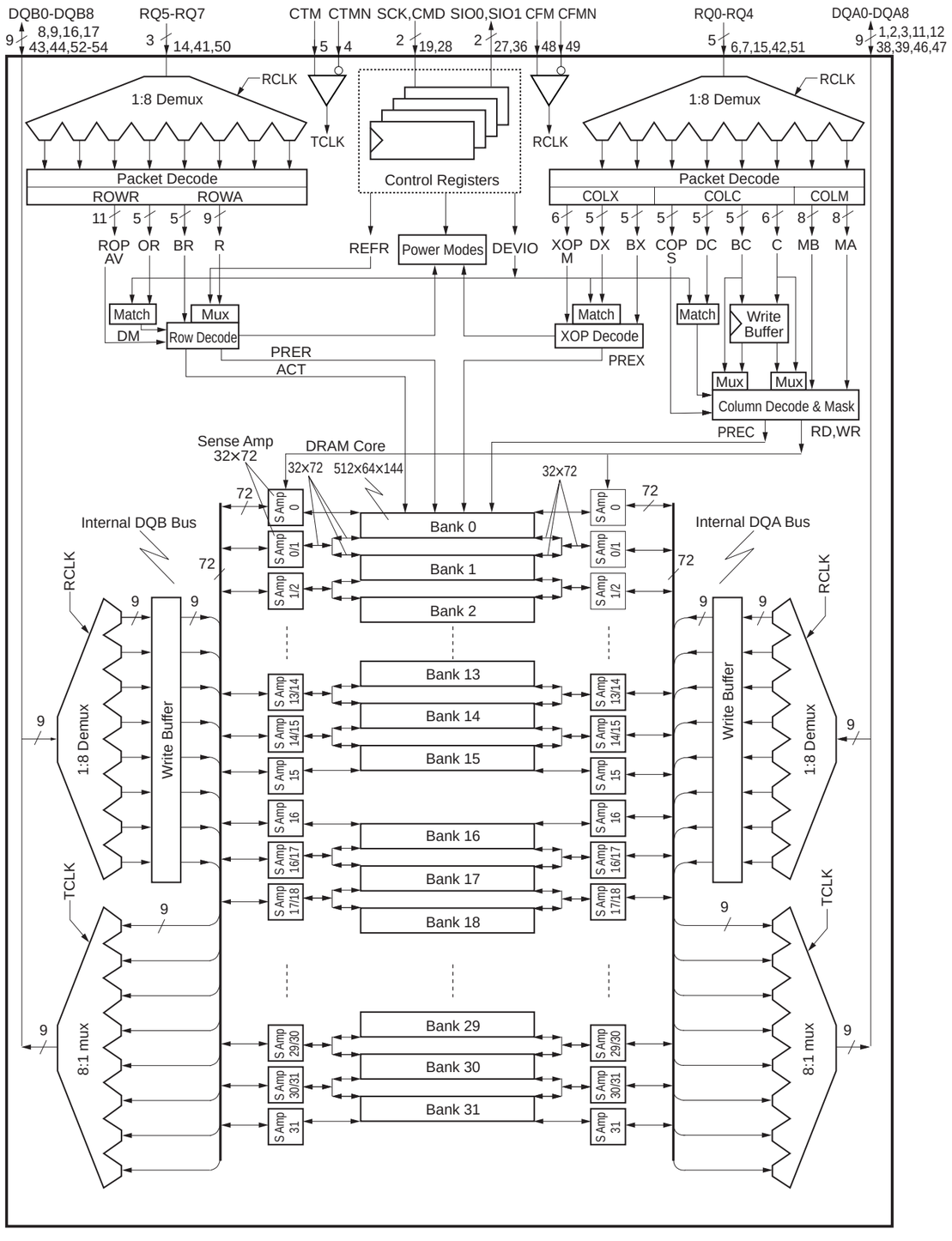

Reproduction Prohibited

CXD9542GB (IC104)

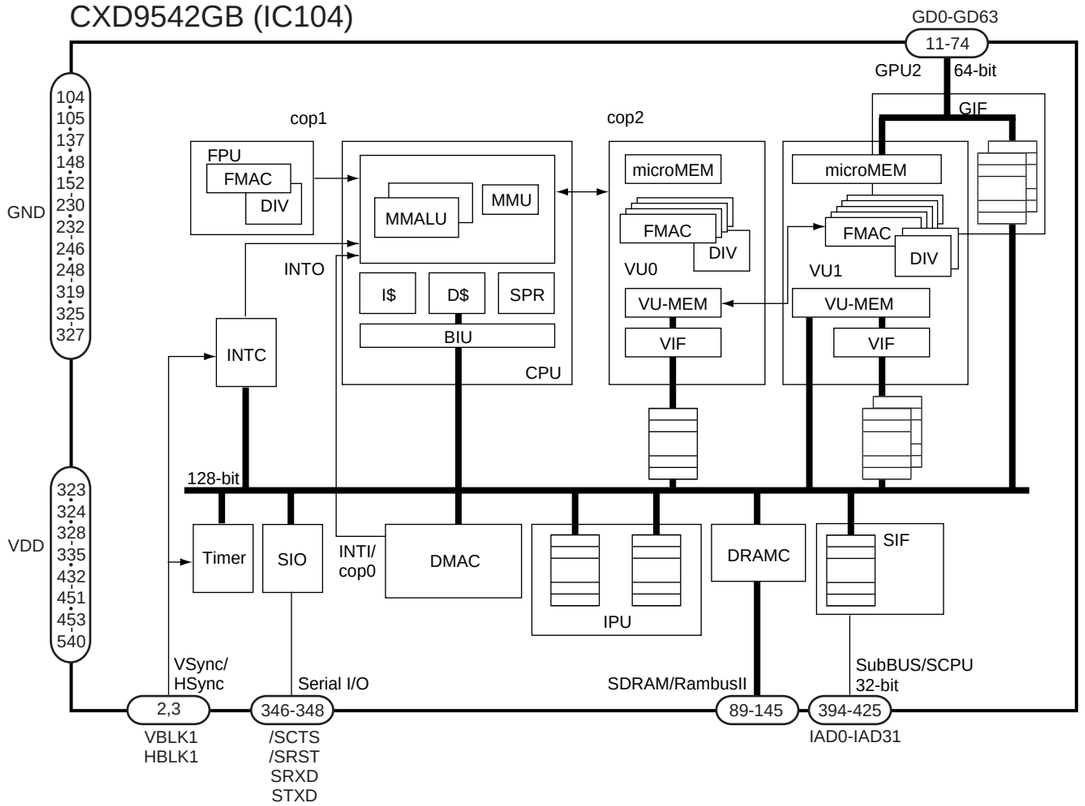

SC44728PBEB (IC205)

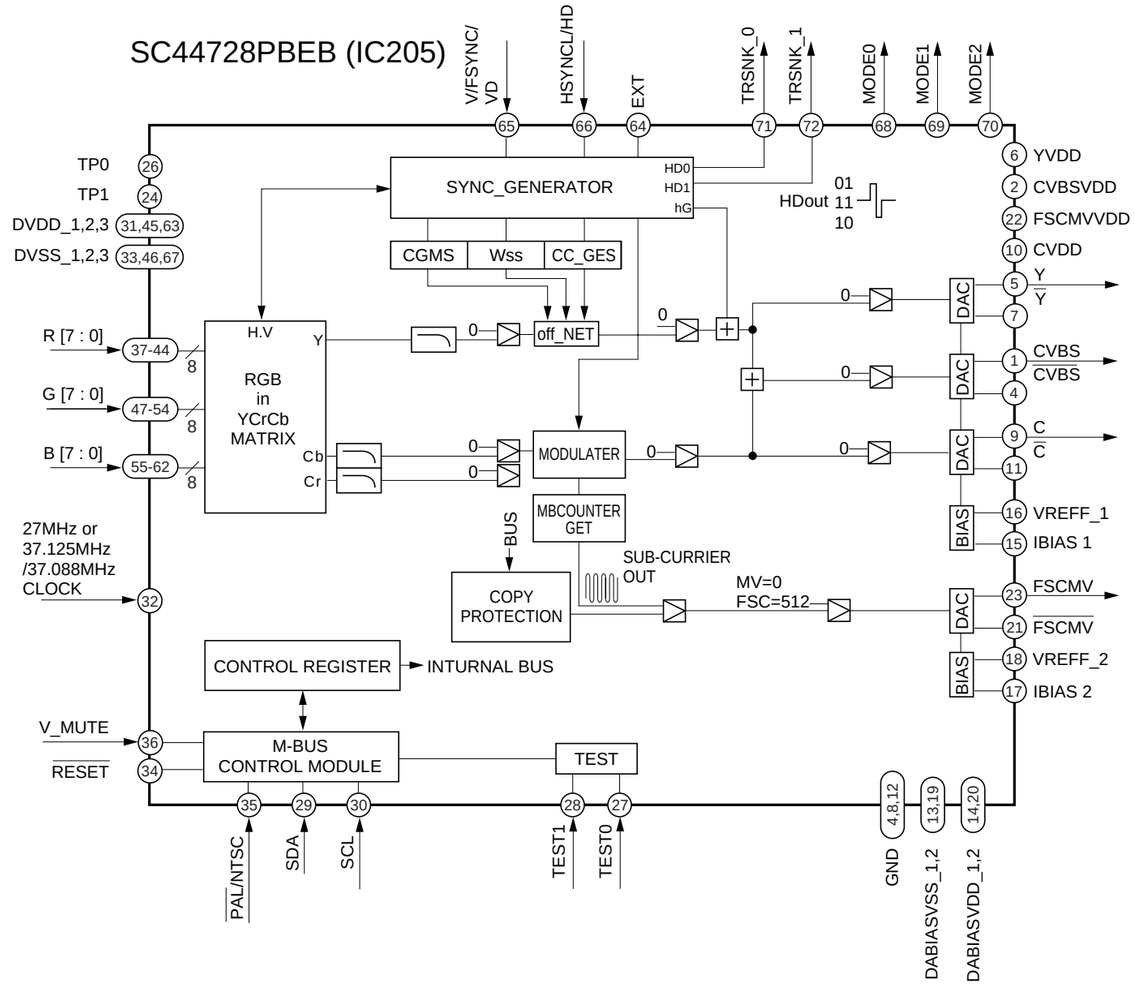

Reproduction Prohibited

T7X16 (YEL) (IC305)

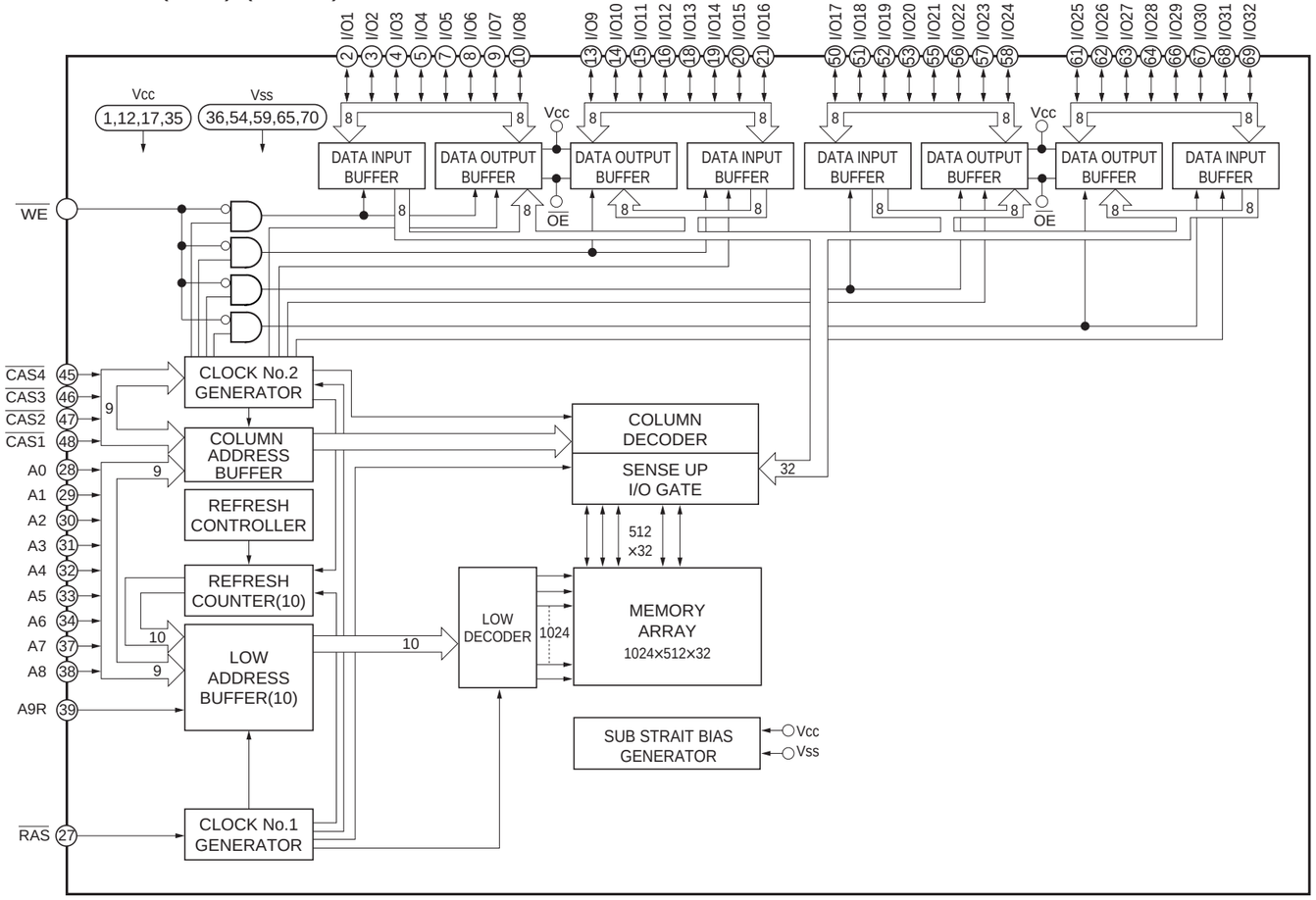

TMP87C807U (IC402) [for GD Board]

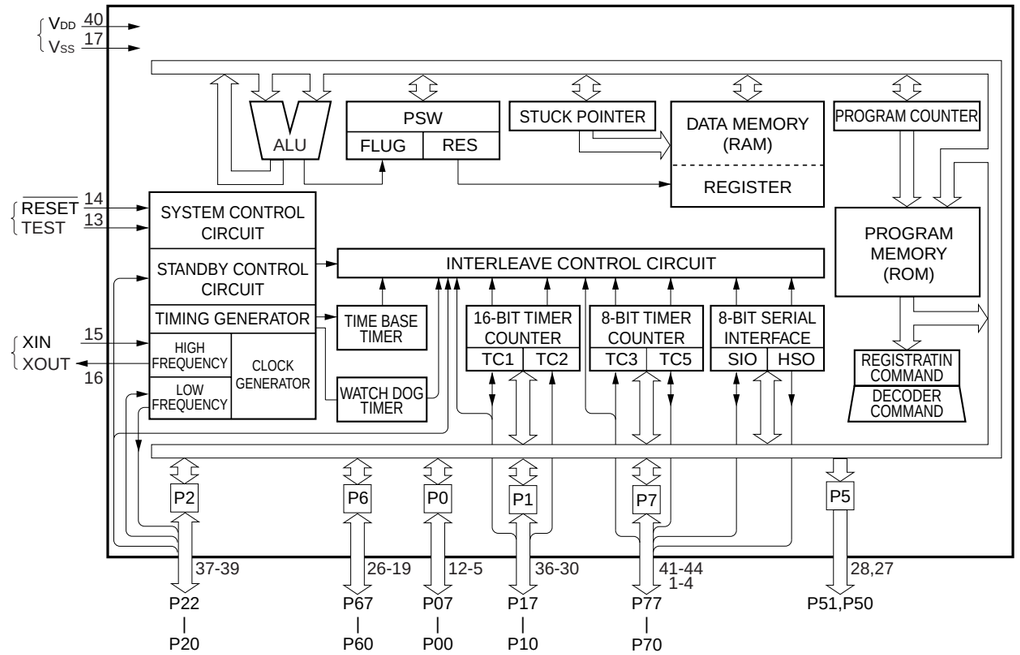

S-80769SN-JO (IC401) [for GD Board]

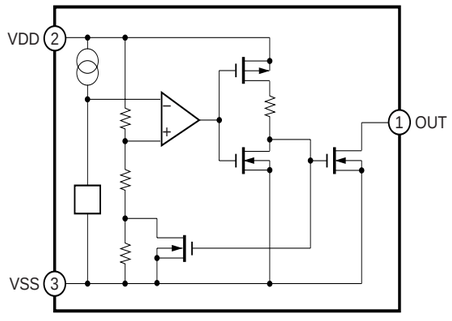

RS5C348A (IC405) [for GD Board]

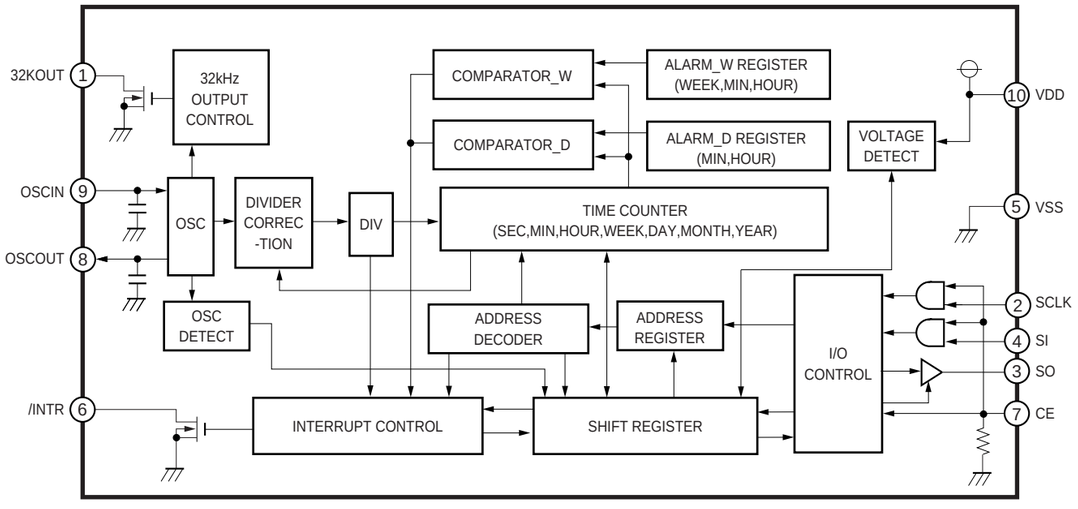

Reproduction Prohibited

BR9080 (IC406) [for GD Board]

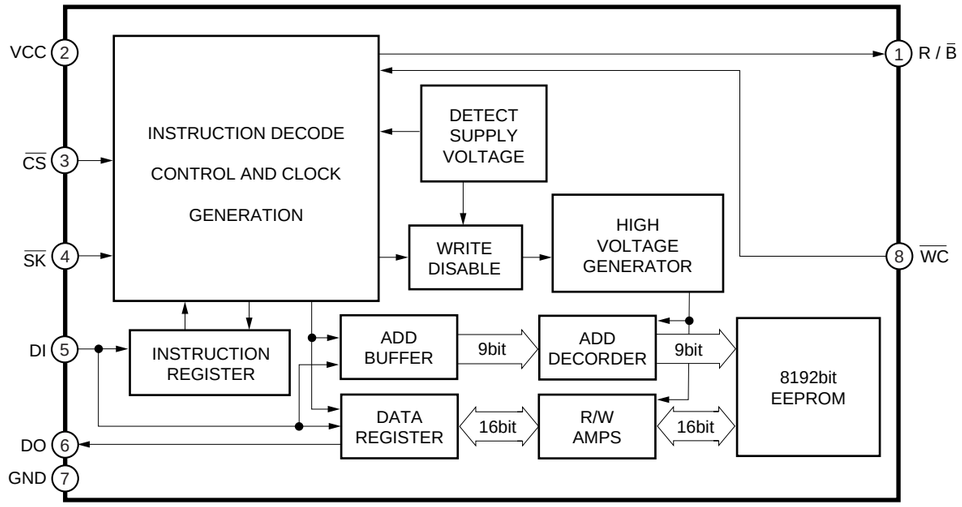

SI-3034LSA-TL (IC413) [for GD Board]

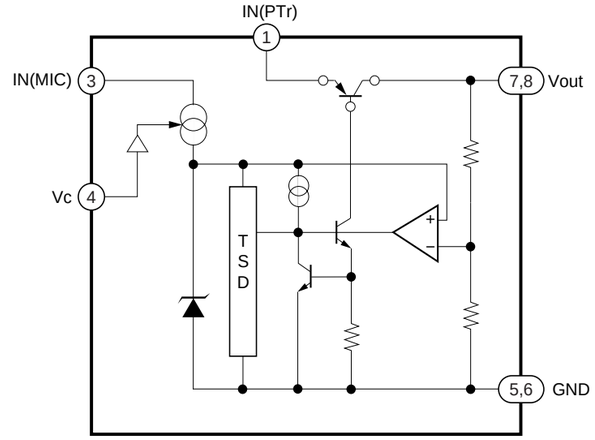

NJM2904V (IC602)

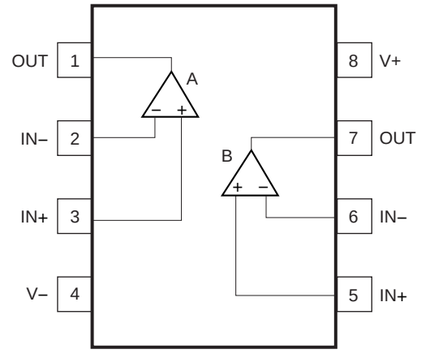

CS4334 (IC517) [for GH Board]

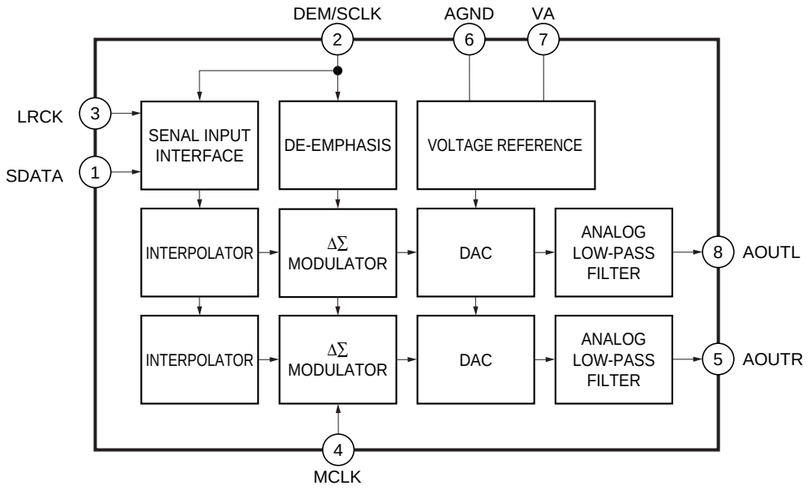

MC74VHC1G66DFT1 (IC606) [for GH Board]

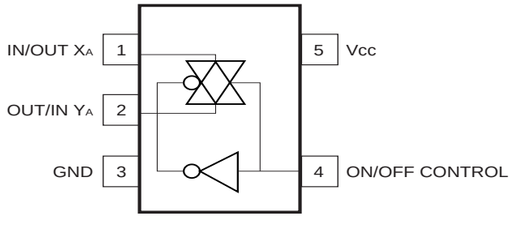

BA6664FM (IC700)

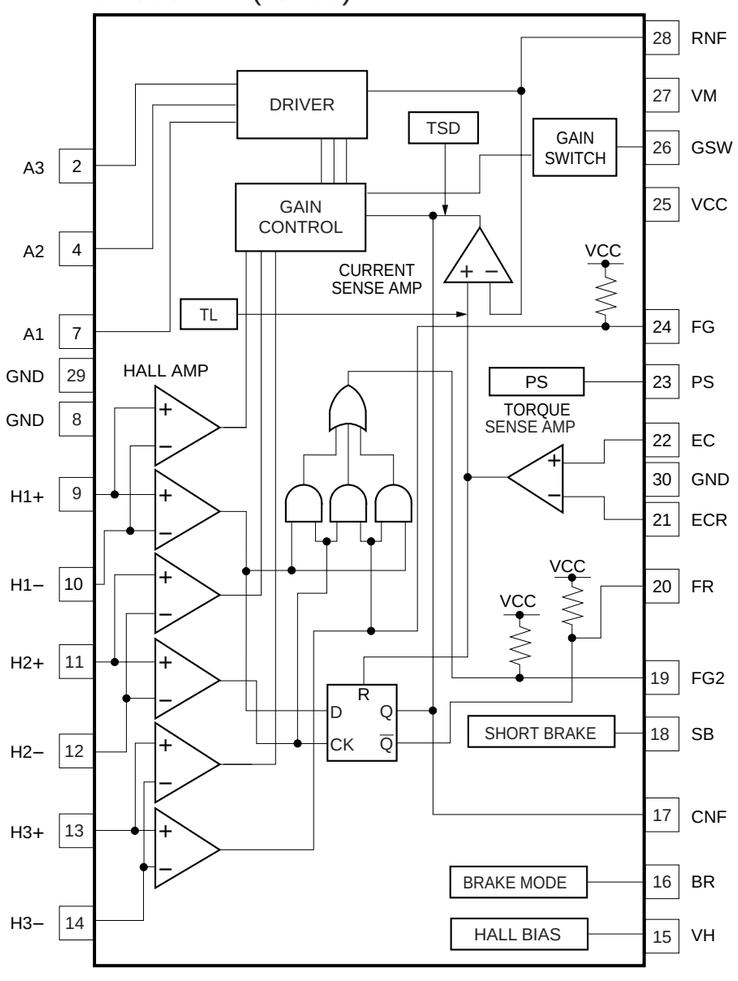

BA5810FP (IC703)

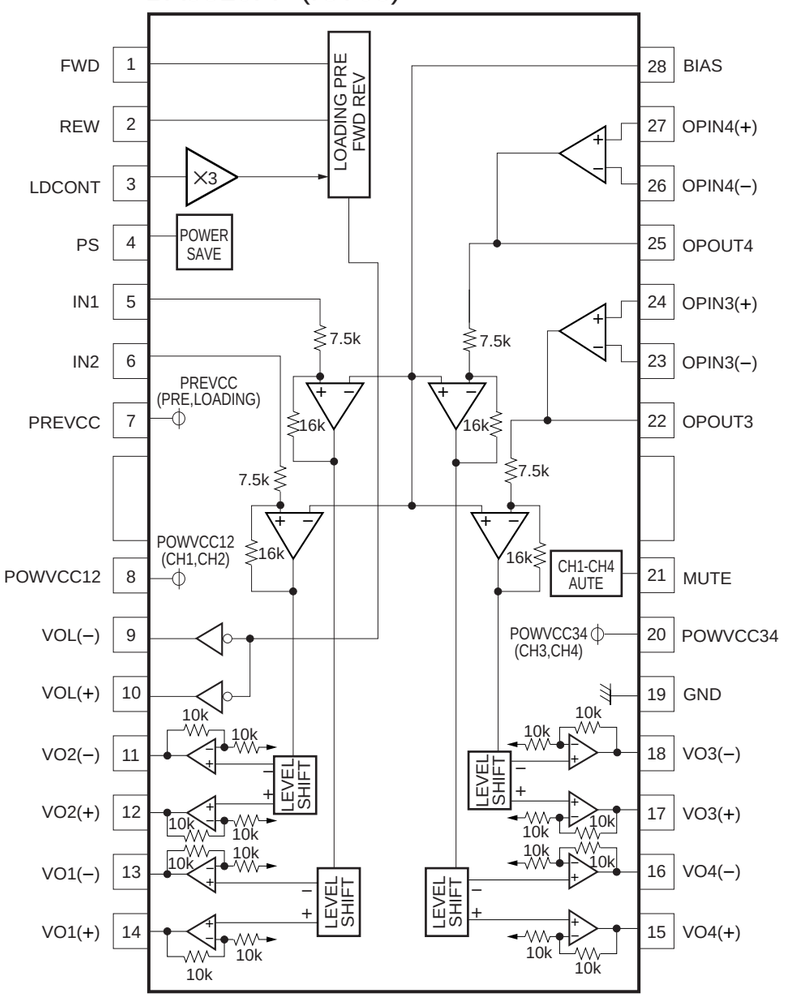

Reproduction Prohibited

SECTION 5
ELECTRICAL PARTS LIST

NOTE :
- Due to standardization, replacements in the parts list may be different from the parts specified in the diagrams or the components used on the set.
- -XX and -X mean standardized parts, so they may have some difference from the original one.
- RESISTERS
  METAL : Metal-film resistor.
  F : nonflammable
  Unit is Ω.
- SEMICONDUCTORS
  In each case, u : µ, for example :
  uA . . : µA . . uPA . . : µPA . .
  uPB. . : µPB. . uPC . . : µPC . . uPD . . : µPD . .
- CAPACITORS
  uF : µF
- COILS
  uH : µH

When indicating parts by reference number, please include the board.

The components identified by mark ⚠ or dotted line with mark. ⚠ are critical for safety. Replace only with part number specified.

NOTE :
- SC In each case :
  S : Stocked parts
  O : Ordered parts
  U : Unsupply parts

Ref.	Part No.	Description
90	**A-6712-760-A**	**MOUNTED CIRCUIT BOARD, GH-004**
90	**A-6712-862-A**	**MOUNTED CIRCUIT BOARD, GH-004-64**
90	**A-6712-816-A**	**MOUNTED CIRCUIT BOARD, GH-005**
		**********
		PLACE CODE #25GH
		<CAPACITOR>
C101	1-128-964-91	CAP, CHIP TANTALUM ELECT 100MF
C102	1-128-964-91	CAP, CHIP TANTALUM ELECT 100MF
C103	1-128-964-91	CAP, CHIP TANTALUM ELECT 100MF
C104	1-107-826-91	CAP, CHIP CERAMIC 100000PF B
C105	1-107-826-91	CAP, CHIP CERAMIC 100000PF B
C106	1-107-826-91	CAP, CHIP CERAMIC 100000PF B
C107	1-107-826-91	CAP, CHIP CERAMIC 100000PF B
C108	1-107-826-91	CAP, CHIP CERAMIC 100000PF B
C109	1-107-826-91	CAP, CHIP CERAMIC 100000PF B
C110	1-107-826-91	CAP, CHIP CERAMIC 100000PF B
C111	1-107-826-91	CAP, CHIP CERAMIC 100000PF B
C112	1-107-826-91	CAP, CHIP CERAMIC 100000PF B
C113	1-107-826-91	CAP, CHIP CERAMIC 100000PF B
C114	1-107-826-91	CAP, CHIP CERAMIC 100000PF B
C115	1-107-826-91	CAP, CHIP CERAMIC 100000PF B
C116	1-107-826-91	CAP, CHIP CERAMIC 100000PF B
C117	1-107-826-91	CAP, CHIP CERAMIC 100000PF B
C118	1-107-826-91	CAP, CHIP CERAMIC 100000PF B
C119	1-107-826-91	CAP, CHIP CERAMIC 100000PF B
C120	1-107-826-91	CAP, CHIP CERAMIC 100000PF B
C121	1-107-826-91	CAP, CHIP CERAMIC 100000PF B
C122	1-107-826-91	CAP, CHIP CERAMIC 100000PF B
C123	1-107-826-91	CAP, CHIP CERAMIC 100000PF B
C124	1-107-826-91	CAP, CHIP CERAMIC 100000PF B
C125	1-107-826-91	CAP, CHIP CERAMIC 100000PF B
C126	1-107-826-91	CAP, CHIP CERAMIC 100000PF B
C127	1-107-826-91	CAP, CHIP CERAMIC 100000PF B
C128	1-107-826-91	CAP, CHIP CERAMIC 100000PF B
C129	1-107-826-91	CAP, CHIP CERAMIC 100000PF B
C130	1-162-919-91	CAP, CERAMIC 22PF CH 1608
C131	1-162-970-91	CAP, CERAMIC 10000PF B 1608
C132	1-107-826-91	CAP, CHIP CERAMIC 100000PF B
C133	1-162-919-91	CAP, CERAMIC 22PF CH 1608
C134	1-107-826-91	CAP, CHIP CERAMIC 100000PF B
C135	1-107-826-91	CAP, CHIP CERAMIC 100000PF B
C136	1-162-964-91	CAP,CHIP CERAMIC 1000PF B 1608
C137	1-107-826-91	CAP, CHIP CERAMIC 100000PF B
C138	1-107-826-91	CAP, CHIP CERAMIC 100000PF B
C139	1-107-826-91	CAP, CHIP CERAMIC 100000PF B
C140	1-107-826-91	CAP, CHIP CERAMIC 100000PF B
C141	1-128-964-91	CAP, CHIP TANTALUM ELECT 100MF
C142	1-107-826-91	CAP, CHIP CERAMIC 100000PF B
C143	1-107-826-91	CAP, CHIP CERAMIC 100000PF B
C144	1-107-826-91	CAP, CHIP CERAMIC 100000PF B
C145	1-107-826-91	CAP, CHIP CERAMIC 100000PF B

SCRef.	Part No.	Description
C146	1-162-964-91	CAP,CHIP CERAMIC 1000PF B 1608
C147	1-162-964-91	CAP,CHIP CERAMIC 1000PF B 1608
C148	1-107-826-91	CAP, CHIP CERAMIC 100000PF B
C149	1-107-826-91	CAP, CHIP CERAMIC 100000PF B
C150	1-162-970-91	CAP, CERAMIC 10000PF B 1608
C151	1-164-160-91	CAP,CERAMIC 20PF CH (1608)
C152	1-164-160-91	CAP,CERAMIC 20PF CH (1608)
C153	1-162-970-91	CAP, CERAMIC 10000PF B 1608
C154	1-162-970-91	CAP, CERAMIC 10000PF B 1608
C155	1-107-826-91	CAP, CHIP CERAMIC 100000PF B
C156	1-107-826-91	CAP, CHIP CERAMIC 100000PF B
C157	1-107-826-91	CAP, CHIP CERAMIC 100000PF B
C158	1-162-970-91	CAP, CERAMIC 10000PF B 1608
C159	1-107-826-91	CAP, CHIP CERAMIC 100000PF B
C160	1-162-925-91	CAP, CERAMIC 68PF CH 1608
C161	1-128-964-91	CAP, CHIP TANTALUM ELECT 100MF
C162	1-162-925-91	CAP, CERAMIC 68PF CH 1608
C163	1-128-964-91	CAP, CHIP TANTALUM ELECT 100MF
C164	1-128-964-91	CAP, CHIP TANTALUM ELECT 100MF
C168	1-162-964-91	CAP,CHIP CERAMIC 1000PF B 1608
C169	1-162-927-91	CAP, CERAMIC 100PF CH 1608
C170	1-125-837-91	CAP, CHIP CERAMIC 1MF B (1608)
C175	1-107-826-91	CAP, CHIP CERAMIC 100000PF B
C176	1-107-826-91	CAP, CHIP CERAMIC 100000PF B
C201	1-107-826-91	CAP, CHIP CERAMIC 100000PF B(GH-005)
C202	1-162-913-91	CAP, CERAMIC 22PF CH 1608 (GH-005)
C203	1-107-826-91	CAP, CHIP CERAMIC 100000PF B (GH-005)
C204	1-162-970-91	CAP, CERAMIC 10000PF B (1608)(GH-005)
C205	1-107-826-91	CAP, CHIP CERAMIC 100000PF B (GH-005)
C206	1-162-964-71	CAP, CHIP CERAMIC 1000PF B 1608(GH-005)
C206	1-162-964-91	CAP,CHIP CERAMIC 1000PF B 1608 (GH-005)
C207	1-162-913-91	CAP, CERAMIC 22PF CH 1608 (GH-005)
C208	1-162-964-71	CAP,CHIP CERAMIC 1000PF B 1608 (GH-005)
C208	1-162-964-91	CAP,CHIP CERAMIC 1000PF B 1608 (GH-005)
C209	1-107-826-91	CAP, CHIP CERAMIC 100000PF B (GH-005)
C210	1-162-964-71	CAP,CHIP CERAMIC 1000PF B 1608 (GH-005)
C210	1-162-964-91	CAP,CHIP CERAMIC 1000PF B 1608 (GH-005)
C211	1-107-826-91	CAP, CHIP CERAMIC 100000PF B (GH-005)
C212	1-125-837-91	CAP, CHIP CERAMIC 1MF B (1608)(GH-004)
C212	1-107-826-91	CAP, CHIP CERAMIC 100000PF B (GH-005)
C213	1-125-837-91	CAP, CHIP CERAMIC 1MF B (1608)(GH-004)
C213	1-107-826-91	CAP, CHIP CERAMIC 100000PF B (GH-005)
C214	1-125-837-91	CAP, CHIP CERAMIC 1MF B (1608)(GH-004)
C214	1-107-826-91	CAP, CHIP CERAMIC 100000PF B (GH-005)
C215	1-125-837-91	CAP, CHIP CERAMIC 1MF B (1608)(GH-004)
C215	1-107-826-91	CAP, CHIP CERAMIC 100000PF B (GH-005)
C216	1-125-837-91	CAP, CHIP CERAMIC 1MF B (1608) (GH-004)
C216	1-107-826-91	CAP, CHIP CERAMIC 100000PF B (GH-005)
C217	1-125-837-91	CAP, CHIP CERAMIC 1MF B (1608)(GH-004)
C217	1-107-826-91	CAP, CHIP CERAMIC 100000PF B (GH-005)
C218	1-125-837-91	CAP, CHIP CERAMIC 1MF B(1608)(GH-004)

Ref.	Part No.	Description
C218	1-107-826-91	CAP, CHIP CERAMIC 100000PF B (GH-005)
C219	1-125-837-91	CAP, CHIP CERAMIC 1MF B (1608)(GH-004)
C219	1-107-826-91	CAP, CHIP CERAMIC 100000PF B (GH-005)
C220	1-125-837-91	CAP, CHIP CERAMIC 1MF B (1608)(GH-004)
C220	1-107-826-91	CAP, CHIP CERAMIC 100000PF B (GH-005)
C221	1-125-837-91	CAP, CHIP CERAMIC 1MF B (1608)(GH-004)
C221	1-107-826-91	CAP, CHIP CERAMIC 100000PF B (GH-005)
C222	1-125-837-91	CAP, CHIP CERAMIC 1MF B (1608)
C223	1-125-837-91	CAP, CHIP CERAMIC 1MF B (1608)
C224	1-125-837-91	CAP, CHIP CERAMIC 1MF B (1608)
C225	1-125-837-91	CAP, CHIP CERAMIC 1MF B (1608)
C226	1-125-837-91	CAP, CHIP CERAMIC 1MF B (1608)(GH-004)
C226	1-107-826-91	CAP, CHIP CERAMIC 100000PF B (GH-005)
C227	1-125-837-91	CAP, CHIP CERAMIC 1MF B (1608)(GH-004)
C227	1-107-826-91	CAP, CHIP CERAMIC 100000PF B (GH-005)
C228	1-125-837-91	CAP, CHIP CERAMIC 1MF B (1608)
C229	1-125-837-91	CAP, CHIP CERAMIC 1MF B (1608)
C230	1-125-837-91	CAP, CHIP CERAMIC 1MF B (1608)
C231	1-125-837-91	CAP, CHIP CERAMIC 1MF B (1608)(GH-004)
C231	1-107-826-91	CAP, CHIP CERAMIC 100000PF B (GH-005)
C232	1-125-837-91	CAP, CHIP CERAMIC 1MF B (1608)(GH-004)
C232	1-107-826-91	CAP, CHIP CERAMIC 100000PF B (GH-005)
C233	1-125-837-91	CAP, CHIP CERAMIC 1MF B (1608)
C234	1-125-837-91	CAP, CHIP CERAMIC 1MF B (1608)
C235	1-125-837-91	CAP, CHIP CERAMIC 1MF B (1608)
C236	1-125-837-91	CAP, CHIP CERAMIC 1MF B (1608)(GH-004)
C236	1-107-826-91	CAP, CHIP CERAMIC 100000PF B (GH-005)
C237	1-125-837-91	CAP, CHIP CERAMIC 1MF B (1608)(GH-004)
C237	1-107-826-91	CAP, CHIP CERAMIC 100000PF B (GH-005)
C238	1-125-837-91	CAP, CHIP CERAMIC 1MF B (1608)
C239	1-125-837-91	CAP, CHIP CERAMIC 1MF B (1608)(GH-004)
C239	1-107-826-91	CAP, CHIP CERAMIC 100000PF B (GH-005)
C240	1-125-837-91	CAP, CHIP CERAMIC 1MF B (1608)
C241	1-125-837-91	CAP, CHIP CERAMIC 1MF B (1608)
C242	1-128-707-22	CAP, TANTALUM ELECT (SMD)220
C243	1-135-609-91	CAP, CHIP TANTALUM ELECT 220MF
C244	1-128-707-22	CAP, TANTALUM ELECT (SMD)220
C245	1-128-707-22	CAP, TANTALUM ELECT (SMD)220
C247	1-107-826-91	CAP, CHIP CERAMIC 100000PF B
C248	1-107-826-91	CAP, CHIP CERAMIC 100000PF B
C249	1-115-156-91	CAP, CERAMIC 1000000PF F 1608
C250	1-127-760-91	CAP, CERAMIC 4.7MF (2012)
C252	1-107-826-91	CAP, CHIP CERAMIC 100000PF B
C254	1-107-826-91	CAP, CHIP CERAMIC 100000PF B
C255	1-107-826-91	CAP, CHIP CERAMIC 100000PF B
C256	1-107-826-91	CAP, CHIP CERAMIC 100000PF B
C257	1-125-837-91	CAP, CHIP CERAMIC 1MF B (1608)
C261	1-128-004-21	CAP, ELECT (CHIP) 10MF
C262	1-128-004-21	CAP, ELECT (CHIP) 10MF
C263	1-128-004-21	CAP, ELECT (CHIP) 10MF
C265	1-117-720-91	CAP, CERAMIC 4.7MF F (2012)
C266	1-128-004-21	CAP, ELECT (CHIP) 10MF
C267	1-126-210-21	CAP, ELECT 220MF
C268	1-126-210-21	CAP, ELECT 220MF
C269	1-164-160-91	CAP,CERAMIC 20PF CH (1608)
C270	1-125-777-81	CAP, CHIP CERAMIC 0.1MF B 1005
C271	1-125-777-81	CAP, CHIP CERAMIC 0.1MF B 1005
C272	1-125-777-81	CAP, CHIP CERAMIC 0.1MF B 1005
C275	1-125-777-81	CAP, CHIP CERAMIC 0.1MF B 1005
C276	1-164-874-81	CAP,CHIP CERAMIC 100PF CH 1005
C277	1-164-874-81	CAP,CHIP CERAMIC 100PF CH 1005
C278	1-113-619-91	CAP, CERAMIC 470000PF F (1608)
C279	1-113-619-91	CAP, CERAMIC 470000PF F (1608)
C281	1-115-156-91	CAP, CERAMIC 1000000PF F 1608 (GH-004)
C282	1-113-619-91	CAP, CERAMIC 470000PF F (1608)
C283	1-107-826-91	CAP, CHIP CERAMIC 100000PF B (GH-004)

Ref.	Part No.	Description
C285	1-113-619-91	CAP, CERAMIC 470000PF F (1608)
C286	1-113-619-91	CAP, CERAMIC 470000PF F (1608)
C287	1-107-826-91	CAP, CHIP CERAMIC 100000PF B
C288	1-125-837-91	CAP, CHIP CERAMIC 1MF B (1608)
C289	1-164-937-81	CAP, CHIPCERAMIC 1000PF B 1005
C290	1-113-619-91	CAP, CERAMIC 470000PF F (1608)
C291	1-162-921-91	CAP, CERAMIC 33PF CH 1608
C292	1-107-725-91	CAP, CERAMIC 100000PF B (2012)
C293	1-137-765-21	CAP, ELECT 47MF
C294	1-107-826-91	CAP, CHIP CERAMIC 100000PF B (GH-004)
C295	1-107-826-91	CAP, CHIP CERAMIC 100000PF B (GH-004)
C296	1-126-210-21	CAP, ELECT 220MF
C297	1-126-210-21	CAP, ELECT 220MF
C298	1-126-210-21	CAP, ELECT 220MF
C302	1-125-777-81	CAP, CHIP CERAMIC 0.1MF B 1005
C303	1-125-777-81	CAP, CHIP CERAMIC 0.1MF B 1005
C304	1-164-937-81	CAP, CHIPCERAMIC 1000PF B 1005
C306	1-164-387-91	CAP, CERAMIC 240PF CH 1608
C307	1-107-826-91	CAP, CHIP CERAMIC 100000PF B
C308	1-165-112-91	CAP, CERAMIC 330000PF F (1608)
C309	1-162-970-91	CAP, CERAMIC 10000PF B 1608
C310	1-162-970-91	CAP, CERAMIC 10000PF B 1608
C311	1-162-916-91	CAP, CERAMIC 12PF CH 1608
C312	1-162-917-91	CAP, CERAMIC 15PF CH 1608
C313	1-162-910-91	CAP, CERAMIC 5.0PF CH 1608
C314	1-162-910-91	CAP, CERAMIC 5.0PF CH 1608
C315	1-125-777-81	CAP, CHIP CERAMIC 0.1MF B 1005
C316	1-165-112-91	CAP, CERAMIC 330000PF F (1608)
C317	1-162-970-91	CAP, CERAMIC 10000PF B 1608
C318	1-162-970-91	CAP, CERAMIC 10000PF B 1608
C319	1-162-970-91	CAP, CERAMIC 10000PF B 1608
C320	1-162-970-91	CAP, CERAMIC 10000PF B 1608
C321	1-162-970-91	CAP, CERAMIC 10000PF B 1608
C322	1-162-970-91	CAP, CERAMIC 10000PF B 1608
C323	1-162-970-91	CAP, CERAMIC 10000PF B 1608
C325	1-162-970-91	CAP, CERAMIC 10000PF B 1608
C326	1-162-970-91	CAP, CERAMIC 10000PF B 1608
C327	1-162-970-91	CAP, CERAMIC 10000PF B 1608
C328	1-162-970-91	CAP, CERAMIC 10000PF B 1608
C329	1-162-970-91	CAP, CERAMIC 10000PF B 1608
C330	1-162-970-91	CAP, CERAMIC 10000PF B 1608
C331	1-162-970-91	CAP, CERAMIC 10000PF B 1608
C332	1-162-970-91	CAP, CERAMIC 10000PF B 1608
C333	1-162-970-91	CAP, CERAMIC 10000PF B 1608
C334	1-162-970-91	CAP, CERAMIC 10000PF B 1608
C335	1-162-970-91	CAP, CERAMIC 10000PF B 1608
C336	1-162-970-91	CAP, CERAMIC 10000PF B 1608
C337	1-162-970-91	CAP, CERAMIC 10000PF B 1608
C338	1-107-826-91	CAP, CHIP CERAMIC 100000PF B
C339	1-125-764-41	CAP, CHIP CERAMIC 100PF CH
C340	1-125-764-41	CAP, CHIP CERAMIC 100PF CH
C341	1-125-764-41	CAP, CHIP CERAMIC 100PF CH
C355	1-107-826-91	CAP, CHIP CERAMIC 100000PF B
C356	1-107-826-91	CAP, CHIP CERAMIC 100000PF B
C363	1-107-826-91	CAP, CHIP CERAMIC 100000PF B
C364	1-107-826-91	CAP, CHIP CERAMIC 100000PF B
C365	1-107-826-91	CAP, CHIP CERAMIC 100000PF B
C366	1-107-826-91	CAP, CHIP CERAMIC 100000PF B
C367	1-107-826-91	CAP, CHIP CERAMIC 100000PF B
C368	1-125-777-81	CAP, CHIP CERAMIC 0.1MF B 1005
C369	1-125-777-81	CAP, CHIP CERAMIC 0.1MF B 1005
C370	1-162-964-91	CAP,CHIP CERAMIC 1000PF B 1608
C371	1-162-964-91	CAP,CHIP CERAMIC 1000PF B 1608
C372	1-128-995-21	CAP, ELECT 100MF
C373	1-128-995-21	CAP, ELECT 100MF
C401	1-164-937-81	CAP, CHIPCERAMIC 1000PF B 1005

Reproduction Prohibited

Ref.	Part No.	Description
C402	1-164-505-91	CAP, CHIP CERAMIC 2.2MF F 2012
C403	1-137-765-21	CAP, ELECT 47MF"
C437	1-107-725-91	CAP, CERAMIC 100000PF B (2012)
C438	1-125-777-81	CAP, CHIP CERAMIC 0.1MF B 1005
C441	1-117-681-21	CAP, ELECT 100MF
C500	1-117-720-91	CAP, CERAMIC 4.7MF F (2012)
C501	1-117-720-91	CAP, CERAMIC 4.7MF F (2012)
C503	1-107-725-91	CAP, CERAMIC 100000PF B (2012)
C504	1-117-720-91	CAP, CERAMIC 4.7MF F (2012)
C505	1-113-619-91	CAP, CERAMIC 470000PF F (1608)
C507	1-107-826-91	CAP, CHIP CERAMIC 100000PF B
C508	1-113-619-91	CAP, CERAMIC 470000PF F (1608)
C509	1-113-619-91	CAP, CERAMIC 470000PF F (1608)
C510	1-113-619-91	CAP, CERAMIC 470000PF F (1608)
C511	1-162-964-91	CAP,CHIP CERAMIC 1000PF B 1608
C512	1-113-619-91	CAP, CERAMIC 470000PF F (1608)
C513	1-113-619-91	CAP, CERAMIC 470000PF F (1608)
C514	1-113-619-91	CAP, CERAMIC 470000PF F (1608)
C516	1-113-619-91	CAP, CERAMIC 470000PF F (1608)
C517	1-113-619-91	CAP, CERAMIC 470000PF F (1608)
C518	1-113-619-91	CAP, CERAMIC 470000PF F (1608)
C520	1-164-874-81	CAP,CHIP CERAMIC 100PF CH 1005
C521	1-125-837-91	CAP, CHIP CERAMIC 1MF B (1608)
C522	1-164-156-91	CAP, CHIP CERAMIC 0.1MF F 1608
C523	1-107-726-91	CAP,CHIP CERAMIC 10000PF B1608
C524	1-113-619-91	CAP, CERAMIC 470000PF F (1608)
C525	1-113-619-91	CAP, CERAMIC 470000PF F (1608)
C526	1-162-964-91	CAP,CHIP CERAMIC 1000PF B 1608(GH-004/005)
C526	1-162-964-91	CAP,CHIP CERAMIC 0.1MF F 1608(GH-004-64)
C527	1-162-964-91	CAP,CHIP CERAMIC 1000PF B 1608
C528	1-125-837-91	CAP, CHIP CERAMIC 1MF B (1608)
C529	1-128-008-21	CAP, ELECT (CHIP) 3.3MF
C530	1-128-008-21	CAP, ELECT (CHIP) 3.3MF
C532	1-164-874-81	CAP,CHIP CERAMIC 100PF CH 1005
C533	1-113-619-91	CAP, CERAMIC 470000PF F (1608)
C534	1-113-619-91	CAP, CERAMIC 470000PF F (1608)
C535	1-113-619-91	CAP, CERAMIC 470000PF F (1608)
C536	1-113-619-91	CAP, CERAMIC 470000PF F (1608)
C537	1-113-619-91	CAP, CERAMIC 470000PF F (1608)
C538	1-113-619-91	CAP, CERAMIC 470000PF F (1608)
C539	1-113-619-91	CAP, CERAMIC 470000PF F (1608)
C540	1-113-619-91	CAP, CERAMIC 470000PF F (1608)
C541	1-113-619-91	CAP, CERAMIC 470000PF F (1608)
C542	1-164-874-81	CAP,CHIP CERAMIC 100PF CH 1005
C543	1-113-619-91	CAP,CERAMIC 470000PF F(1608)(GH-004-64)
C600	1-137-764-21	CAP, ELECT 22MF
C601	1-164-156-91	CAP, CHIP CERAMIC 0.1MF F 1608
C602	1-107-820-81	CAP, CHIP CERAMIC 100000PF F
C603	1-164-937-81	CAP, CHIPCERAMIC 1000PF B 1005
C605	1-164-937-81	CAP, CHIPCERAMIC 1000PF B 1005
C606	1-162-964-91	CAP,CHIP CERAMIC 1000PF B 1608
C607	1-162-968-91	CAP,CHIP CERAMIC 4700PF B 1608
C609	1-107-826-91	CAP, CHIP CERAMIC 100000PF B
C610	1-164-937-81	CAP, CHIPCERAMIC 1000PF B 1005
C617	1-164-156-91	CAP, CHIP CERAMIC 0.1MF F 1608
C618	1-162-967-91	CAP, CERAMIC 3300PF B 1608
C620	1-164-677-91	CAP,CERAMIC 33000PF B 1608
C622	1-164-156-91	CAP, CHIP CERAMIC 0.1MF F 1608
C623	1-164-156-91	CAP, CHIP CERAMIC 0.1MF F 1608
C624	1-107-826-91	CAP, CHIP CERAMIC 100000PF B
C625	1-164-156-91	CAP, CHIP CERAMIC 0.1MF F 1608
C627	1-162-966-91	CAP, CERAMIC 2200PF B 1608
C628	1-162-966-91	CAP, CERAMIC 2200PF B 1608
C629	1-164-156-91	CAP, CHIP CERAMIC 0.1MF F 1608
C630	1-164-173-91	CAP,CERAMIC 3900PF B 1608
C631	1-162-968-91	CAP,CHIP CERAMIC 4700PF B 1608
C632	1-107-826-91	CAP, CHIP CERAMIC 100000PF B
C633	1-164-156-91	CAP, CHIP CERAMIC 0.1MF F 1608
C634	1-164-156-91	CAP, CHIP CERAMIC 0.1MF F 1608
C635	1-162-968-91	CAP,CHIP CERAMIC 4700PF B 1608
C636	1-125-777-81	CAP, CHIP CERAMIC 0.1MF B 1005
C637	1-164-937-81	CAP, CHIPCERAMIC 1000PF B 1005
C638	1-164-943-81	CAP,CHIP CERAMIC 10000PF B1005
C639	1-164-217-91	CAP,CERAMIC 150PF CH 1608
C640	1-135-259-91	CAP, CHIP TANTALUM ELECT 10MF
C642	1-164-156-91	CAP, CHIP CERAMIC 0.1MF F 1608
C643	1-125-777-81	CAP, CHIP CERAMIC 0.1MF B 1005
C644	1-164-882-81	CAP,CHIP CERAMIC 220PF CH 1005
C645	1-165-176-91	CAP,CERAMIC 47000PF B 1608
C646	1-164-937-81	CAP, CHIPCERAMIC 1000PF B 1005
C647	1-107-823-91	CAP, CERAMIC 470000PF B (2012)
C648	1-107-820-81	CAP, CHIP CERAMIC 100000PF F
C649	1-164-943-81	CAP,CHIP CERAMIC 10000PF B1005
C650	1-164-882-81	CAP,CHIP CERAMIC 220PF CH 1005
C651	1-164-939-81	CAP, CHIPCERAMIC 2200PF B 1005
C652	1-125-777-81	CAP, CHIP CERAMIC 0.1MF B 1005
C653	1-164-939-81	CAP, CHIPCERAMIC 2200PF B 1005
C654	1-164-156-91	CAP, CHIP CERAMIC 0.1MF F 1608
C655	1-135-259-91	CAP, CHIP TANTALUM ELECT 10MF
C656	1-107-820-81	CAP, CHIP CERAMIC 100000PF F
C657	1-164-230-91	CAP,CERAMIC 220PF CH 1608
C658	1-164-882-81	CAP,CHIP CERAMIC 220PF CH 1005
C660	1-125-777-81	CAP, CHIP CERAMIC 0.1MF B 1005
C661	1-107-820-81	CAP, CHIP CERAMIC 100000PF F
C662	1-164-156-91	CAP, CHIP CERAMIC 0.1MF F 1608
C663	1-164-156-91	CAP, CHIP CERAMIC 0.1MF F 1608
C664	1-135-259-91	CAP, CHIP TANTALUM ELECT 10MF
C665	1-107-820-81	CAP, CHIP CERAMIC 100000PF F
C666	1-107-820-81	CAP, CHIP CERAMIC 100000PF F
C667	1-107-820-81	CAP, CHIP CERAMIC 100000PF F
C668	1-107-826-91	CAP, CHIP CERAMIC 100000PF B
C671	1-107-820-81	CAP, CHIP CERAMIC 100000PF F
C672	1-107-820-81	CAP, CHIP CERAMIC 100000PF F
C673	1-107-820-81	CAP, CHIP CERAMIC 100000PF F
C674	1-125-777-81	CAP, CHIP CERAMIC 0.1MF B 1005
C675	1-107-820-81	CAP, CHIP CERAMIC 100000PF F
C676	1-107-820-81	CAP, CHIP CERAMIC 100000PF F
C680	1-162-964-91	CAP,CHIP CERAMIC 1000PF B 1608
C685	1-107-823-91	CAP, CERAMIC 470000PF B (2012)
C688	1-162-964-91	CAP,CHIP CERAMIC 1000PF B 1608
C689	1-162-968-91	CAP,CHIP CERAMIC 4700PF B 1608
C700	1-164-943-81	CAP,CHIP CERAMIC 10000PF B 1005
C701	1-164-943-81	CAP,CHIP CERAMIC 10000PF B 1005
C702	1-164-943-81	CAP,CHIP CERAMIC 10000PF B1005
C703	1-107-820-81	CAP, CHIP CERAMIC 100000PF F
C704	1-164-156-91	CAP, CHIP CERAMIC 0.1MF F 1608
C705	1-164-156-91	CAP, CHIP CERAMIC 0.1MF F 1608
C706	1-127-692-91	CAP, CHIP CERAMIC 10MF B 3225
C707	1-163-038-91	CAP, CERAMIC 100000PF F (2012)
C710	1-164-156-91	CAP, CHIP CERAMIC 0.1MF F 1608
C713	1-164-156-91	CAP, CHIP CERAMIC 0.1MF F 1608
C717	1-163-009-91	CAP,CHIP CERAMIC 1000PF B 2012
C718	1-107-823-91	CAP, CERAMIC 470000PF B (2012)
C719	1-163-038-91	CAP, CERAMIC 100000PF F (2012)
C720	1-127-692-91	CAP, CHIP CERAMIC 10MF B 3225
C722	1-163-009-91	CAP,CHIP CERAMIC 1000PF B 2012
C727	1-164-937-81	CAP, CHIPCERAMIC 1000PF B 1005
C728	1-164-230-91	CAP,CERAMIC 220PF CH 1608
C729	1-164-230-91	CAP,CERAMIC 220PF CH 1608
C730	1-164-230-91	CAP,CERAMIC 220PF CH 1608
C731	1-164-230-91	CAP,CERAMIC 220PF CH 1608
C901	1-107-826-91	CAP, CHIP CERAMIC 100000PF B
C902	1-107-826-91	CAP, CHIP CERAMIC 100000PF B
C903	1-107-826-91	CAP, CHIP CERAMIC 100000PF B
C904	1-107-826-91	CAP, CHIP CERAMIC 100000PF B
C905	1-107-826-91	CAP, CHIP CERAMIC 100000PF B
C906	1-107-826-91	CAP, CHIP CERAMIC 100000PF B
C907	1-107-826-91	CAP, CHIP CERAMIC 100000PF B
C908	1-107-826-91	CAP, CHIP CERAMIC 100000PF B
C909	1-107-826-91	CAP, CHIP CERAMIC 100000PF B
C910	1-107-826-91	CAP, CHIP CERAMIC 100000PF B
C911	1-107-826-91	CAP, CHIP CERAMIC 100000PF B
C912	1-107-826-91	CAP, CHIP CERAMIC 100000PF B
C913	1-107-826-91	CAP, CHIP CERAMIC 100000PF B
C914	1-107-826-91	CAP, CHIP CERAMIC 100000PF B
C915	1-107-826-91	CAP, CHIP CERAMIC 100000PF B
C916	1-107-826-91	CAP, CHIP CERAMIC 100000PF B
C917	1-107-826-91	CAP, CHIP CERAMIC 100000PF B
C918	1-107-826-91	CAP, CHIP CERAMIC 100000PF B
C919	1-107-826-91	CAP, CHIP CERAMIC 100000PF B
C920	1-107-826-91	CAP, CHIP CERAMIC 100000PF B
C921	1-107-826-91	CAP, CHIP CERAMIC 100000PF B
C922	1-107-826-91	CAP, CHIP CERAMIC 100000PF B
C923	1-107-826-91	CAP, CHIP CERAMIC 100000PF B
C924	1-107-826-91	CAP, CHIP CERAMIC 100000PF B
C925	1-107-826-91	CAP, CHIP CERAMIC 100000PF B
C926	1-107-826-91	CAP, CHIP CERAMIC 100000PF B
C927	1-107-826-91	CAP, CHIP CERAMIC 100000PF B
C928	1-107-826-91	CAP, CHIP CERAMIC 100000PF B
C929	1-107-826-91	CAP, CHIP CERAMIC 100000PF B
C930	1-107-826-91	CAP, CHIP CERAMIC 100000PF B
C931	1-107-826-91	CAP, CHIP CERAMIC 100000PF B
C932	1-107-826-91	CAP, CHIP CERAMIC 100000PF B
C933	1-107-826-91	CAP, CHIP CERAMIC 100000PF B
C934	1-107-826-91	CAP, CHIP CERAMIC 100000PF B
C935	1-107-826-91	CAP, CHIP CERAMIC 100000PF B
C936	1-107-826-91	CAP, CHIP CERAMIC 100000PF B
C937	1-107-826-91	CAP, CHIP CERAMIC 100000PF B
C938	1-107-826-91	CAP, CHIP CERAMIC 100000PF B
C939	1-107-826-91	CAP, CHIP CERAMIC 100000PF B
C940	1-107-826-91	CAP, CHIP CERAMIC 100000PF B
C941	1-107-826-91	CAP, CHIP CERAMIC 100000PF B
C942	1-107-826-91	CAP, CHIP CERAMIC 100000PF B
C943	1-107-826-91	CAP, CHIP CERAMIC 100000PF B
C944	1-107-826-91	CAP, CHIP CERAMIC 100000PF B
C945	1-107-826-91	CAP, CHIP CERAMIC 100000PF B
C946	1-107-826-91	CAP, CHIP CERAMIC 100000PF B
C947	1-107-826-91	CAP, CHIP CERAMIC 100000PF B
C948	1-107-826-91	CAP, CHIP CERAMIC 100000PF B
C949	1-107-826-91	CAP, CHIP CERAMIC 100000PF B
C950	1-107-826-91	CAP, CHIP CERAMIC 100000PF B
C951	1-107-826-91	CAP, CHIP CERAMIC 100000PF B
C952	1-107-826-91	CAP, CHIP CERAMIC 100000PF B
C953	1-107-826-91	CAP, CHIP CERAMIC 100000PF B
C954	1-107-826-91	CAP, CHIP CERAMIC 100000PF B
C955	1-107-826-91	CAP, CHIP CERAMIC 100000PF B
C956	1-107-826-91	CAP, CHIP CERAMIC 100000PF B
C957	1-107-826-91	CAP, CHIP CERAMIC 100000PF B
C958	1-107-826-91	CAP, CHIP CERAMIC 100000PF B
C959	1-107-826-91	CAP, CHIP CERAMIC 100000PF B
C960	1-107-826-91	CAP, CHIP CERAMIC 100000PF B
C961	1-107-826-91	CAP, CHIP CERAMIC 100000PF B
C962	1-107-826-91	CAP, CHIP CERAMIC 100000PF B
C963	1-107-826-91	CAP, CHIP CERAMIC 100000PF B
C965	1-107-826-91	CAP, CHIP CERAMIC 100000PF B
C966	1-107-826-91	CAP, CHIP CERAMIC 100000PF B
C967	1-125-837-91	CAP, CHIP CERAMIC 1MF B (1608)
C968	1-125-837-91	CAP, CHIP CERAMIC 1MF B (1608)
C980	1-107-826-91	CAP, CHIP CERAMIC 100000PF B
C981	1-107-826-91	CAP, CHIP CERAMIC 100000PF B (GH-004)
C981	1-125-837-91	CAP, CHIP CERAMIC 1MF B (1608)(GH-005)
C982	1-107-826-91	CAP, CHIP CERAMIC 100000PF B
C983	1-107-826-91	CAP, CHIP CERAMIC 100000PF B (GH-004)
C983	1-125-837-91	CAP, CHIP CERAMIC 1MF B(1608)(GH-005)
C984	1-107-826-91	CAP, CHIP CERAMIC 100000PF B
C985	1-107-826-91	CAP, CHIP CERAMIC 100000PF B
C986	1-107-826-91	CAP, CHIP CERAMIC 100000PF B
C987	1-107-826-91	CAP, CHIP CERAMIC 100000PF B
C988	1-107-826-91	CAP, CHIP CERAMIC 100000PF B (GH-004)
C988	1-125-837-91	CAP, CHIP CERAMIC 1MF B(1608)(GH-005)
C989	1-107-826-91	CAP, CHIP CERAMIC 100000PF B
C990	1-125-837-91	CAP, CHIP CERAMIC 1MF B(1608)(GH-004)
C990	1-107-826-91	CAP, CHIP CERAMIC 100000PF B (GH-005)
		<CONNECTOR>
CN201	1-794-209-11	CONNECTOR, SQUARE TYPE 12P
CN301	1-794-208-11	CONNECTOR, SQUARE TYPE 4P
CN302	1-794-206-21	CONNECTOR, FFC/FPC (ZIF) 36P
CN303	1-794-207-11	CONNECTOR, USB 8P
CN403	1-770-619-21	PIN, CONNECTOR 2P
CN404	1-815-141-21	CONNECTOR, BOARD TO BOARD 120P
CN405	1-815-122-11	PIN, CONNECTOR (GH-GD) 4P
CN501	1-418-965-11	TRANSMITTER UNIT, LIGHT
CN504	1-815-190-21	CONNECTOR BOARD TO BOARD 110P
CN604	1-794-237-21	CONNECTOR, FFC/FPC 30P
CN605	1-815-226-21	CONNECTOR, FFC/FPC (ZIF) 40P
		<NETWORK>
CP201	1-234-605-21	NETWORK, RC
		<DIODE>
D201	8-719-065-78	DIODE MAZF12000LS0
D202	8-719-064-61	DIODE 01BZA8.2(TE85L)
D203	8-719-064-61	DIODE 01BZA8.2(TE85L)
D204	8-719-064-61	DIODE 01BZA8.2(TE85L)
D205	8-719-064-61	DIODE 01BZA8.2(TE85L)
D206	8-719-064-61	DIODE 01BZA8.2(TE85L)
D208	8-719-064-61	DIODE 01BZA8.2(TE85L)
D209	8-719-064-61	DIODE 01BZA8.2(TE85L)
D210	8-719-064-61	DIODE 01BZA8.2(TE85L)
D301	8-719-071-87	DIODE MA785-(TX),SO
D302	8-719-071-87	DIODE MA785-(TX),SO
D500	8-719-941-21	DIODE DAP202UT106
D501	8-719-082-76	DIODE CL-200TLY-C-TV
		<TERMINAL>
ET401	1-694-592-21	TERMINAL
ET402	1-694-592-21	TERMINAL
		<FERRITE BEAD>
FB102	1-469-667-21	FERRITE, EMI (SMD)
FB103	1-469-667-21	FERRITE, EMI (SMD)
FB201	1-414-813-21	FERRITE, EMI (SMD)
FB202	1-500-113-22	BEAD, FERRITE (CHIP)
FB203	1-500-113-22	BEAD, FERRITE (CHIP)
FB204	1-500-113-22	BEAD, FERRITE (CHIP)
FB205	1-500-113-22	BEAD, FERRITE (CHIP)
FB206	1-500-113-22	BEAD, FERRITE (CHIP)
FB207	1-469-667-21	FERRITE, EMI (SMD) (GH-005)
FB208	1-469-667-21	FERRITE, EMI (SMD) (GH-005)
FB303	1-414-555-21	FERRITE, EMI (SMD)
FB304	1-414-555-21	FERRITE, EMI (SMD)
FB305	1-414-555-21	FERRITE, EMI (SMD)

Reproduction Prohibited

Ref.	Part No.	Description	
FB306	1-414-555-21	FERRITE, EMI (SMD)	
FB307	1-414-555-21	FERRITE, EMI (SMD)	
FB308	1-414-555-21	FERRITE, EMI (SMD)	
FB309	1-414-555-21	FERRITE, EMI (SMD)	
FB310	1-414-555-21	FERRITE, EMI (SMD)	
FB311	1-414-555-21	FERRITE, EMI (SMD)	
FB312	1-414-555-21	FERRITE, EMI (SMD)	
FB313	1-469-324-21	FERRITE, EMI (SMD)	
FB314	1-469-324-21	FERRITE, EMI (SMD)	
FB315	1-469-324-21	FERRITE, EMI (SMD)	
FB316	1-469-324-21	FERRITE, EMI (SMD)	
		<FILTER>	
FL201	1-469-642-21	FILTER, EMI (SMD)	(2125)
FL202	1-469-642-21	FILTER, EMI (SMD)	(2125)
FL203	1-469-642-21	FILTER, EMI (SMD)	(2125)
FL301	1-234-601-21	FILTER (USB)	
FL302	1-234-601-21	FILTER (USB)	
		<IC>	
IC101	8-759-658-75	IC CY2212ZC-1T (GH-004)	
IC101	8-759-653-46	IC SN104971PWR (GH-005)	
IC102	8-759-666-89	IC TC59RM716GB-8(YEL	
IC103	8-759-666-89	IC TC59RM716GB-8(YEL	
IC104	8-759-699-09	IC CXD9615GB	
IC105	8-759-689-90	IC LM74CIMX-3	
IC201	8-759-653-46	IC SN104971PWR (GH-005)	
IC202	8-759-699-08	IC CXD2944GB (GH-004)	
IC202	8-752-404-01	IC CXD2934GB-T7 (GH-005)	
IC205	8-759-696-97	IC SC44728APBEB	
IC206	8-752-093-56	IC CXA3525R-T4	
IC207	8-759-391-69	IC MC78M05CDT	
IC208	8-759-683-81	IC SN74CBT1G125DCKR (GH-004)	
IC209	8-759-697-60	IC MM3071CFBE	
IC303	8-759-699-11	IC CXD9619GB	
IC305	8-759-496-87	IC T7X16(YEL)	
IC306	8-759-688-07	IC MM3051NULE	
IC401	8-759-391-69	IC MC78M05CDT	
IC403	8-759-581-11	IC NJM2125F(TE2)	
IC501	8-759-699-10	IC CXD9611R	
IC502	8-759-712-79	IC K4E151612D-TL50T00	
IC503	8-759-712-83	IC MR27V3202E-19TPZ020 (GH-004/005)	
IC504	8-752-408-53	IC CXD2942AR	
IC505	8-759-830-91	IC TC5364200FT-PA01 (GH-004-64)	
IC506	8-759-712-84	IC MR27V3202E-20TPZ020 (GH-004/005)	
IC517	8-759-667-10	IC CS4335-KS	
IC518	8-759-680-49	IC TC7WB125FK(TE85R) (GH-004-64)	
IC602	8-759-693-13	IC NJM12904V(TE2)	
IC603	8-759-370-11	IC NJM2100V-TE2	
IC604	8-752-919-93	IC CXP102064-101R-T6	
IC605	8-752-409-02	IC CXD1869AQ	
IC606	8-759-712-38	IC HD74HC1G66CME	
IC607	8-759-712-38	IC HD74HC1G66CME	
IC700	8-759-588-60	IC BA6664FM-E2	
IC701	8-759-370-11	IC NJM2100V-TE2	
IC703	8-759-658-87	IC BA5810FP-E2	
		<INDUCTOR>	
L102	1-414-398-41	INDUCTOR (SMD) 10.0UH	
L202	1-414-398-41	INDUCTOR (SMD) 10.0UH (GH-005)	
L203	1-469-967-21	INDUCTOR, CHIP 10UH (2518)	
L205	1-469-967-21	INDUCTOR, CHIP 10UH (2518) (GH-004)	
L206	1-412-960-21	INDUCTOR, SMALL TYPE 56UH 2518	
		<COIL>	
LF101	1-419-100-21	COIL, COMMON-MODE CHOKE	
LF303	1-419-521-21	COIL, COMMOM MODE CHOKE	
LF304	1-419-521-21	COIL, COMMOM MODE CHOKE	
LF305	1-419-521-21	COIL, COMMOM MODE CHOKE	
LF306	1-419-521-21	COIL, COMMOM MODE CHOKE	
		<LINK>	
PS401	1-576-259-21	RINK, IC	
PS403	1-533-915-41	RINK, CHIP IC	
PS601	1-533-940-21	RINK, CHIP IC	
PS751	1-533-282-21	LINK, IC	
PS752	1-533-940-21	RINK, CHIP IC	
		<TRANSISTOR>	
Q201	8-729-026-50	TRANSISTOR 2SA1037AK-T146-QR (GH-004)	
Q201	8-729-026-50	TRANSISTOR 2SA1037AK-T146-QR (GH-005)	
Q204	8-729-049-77	TRANSISTOR HN1B01F-GR(T5LSONY)	
Q205	8-729-427-71	TRANSISTOR XP4401-TXE	
Q206	8-729-014-34	TRANSISTOR RN2311-TE85L (GH-005)	
Q401	8-729-054-34	TRANSISTOR FDN304P	
Q407	8-729-052-41	TRANSISTOR 2SC4541 (2TL SONY1)	
Q505	8-729-047-48	TRANSISTOR UMD12N-TR	
Q506	8-729-047-71	TRANSISTOR FMG12-T-148	
Q600	8-729-048-50	TRANSISTOR 2SK3018-T106	
Q601	8-729-029-14	TRANSISTOR DTC144EUA-T106	
Q603	8-729-017-33	TRANSISTOR RN1706-TE85R (GH-004)	
Q603	8-729-017-33	TRANSISTOR RN1706-TE85R (GH-005)	
Q700	8-729-029-13	TRANSISTOR DTC143ZUA-T106 (GH-004)	
Q700	8-729-029-13	TRANSISTOR DTC143ZUA-T106 (GH-005)	
		<RESISTOR>	
R101	1-211-983-91	RES, CHIP 39	(1608)
R102	1-218-826-91	RES, CHIP 130	(1608)
R103	1-211-983-91	RES, CHIP 39	(1608)
R104	1-218-826-91	RES, CHIP 130	(1608)
R105	1-216-864-91	CONDUCTOR, CHIP	(1608)
R106	1-216-809-91	RES, CHIP 100	(1608)
R107	1-216-809-91	RES, CHIP 100	(1608)
R109	1-216-829-91	RES, CHIP 4.7K	(1608)
R110	1-211-983-91	RES, CHIP 39	(1608)
R111	1-211-983-91	RES, CHIP 39	(1608)
R112	1-211-989-91	RES, CHIP 68	(1608)
R113	1-211-989-91	RES, CHIP 68	(1608)
R114	1-211-983-91	RES, CHIP 39	(1608)
R115	1-211-983-91	RES, CHIP 39	(1608)
R116	1-211-983-91	RES, CHIP 39	(1608)
R117	1-211-983-91	RES, CHIP 39	(1608)
R118	1-211-973-91	RES, CHIP 15	(1608)
R119	1-211-973-91	RES, CHIP 15	(1608)
R120	1-211-973-91	RES, CHIP 15	(1608)
R121	1-211-973-91	RES, CHIP 15	(1608)
R122	1-216-864-91	CONDUCTOR, CHIP	(1608)
R123	1-216-864-91	CONDUCTOR, CHIP	(1608)
R124	1-216-864-91	CONDUCTOR, CHIP	(1608)
R125	1-216-864-91	CONDUCTOR, CHIP	(1608)
R126	1-216-833-91	RES, CHIP 10K	(1608)
R127	1-216-829-91	RES, CHIP 4.7K	(1608)
R128	1-216-829-91	RES, CHIP 4.7K	(1608)
R129	1-216-821-91	RES, CHIP 1.0K	(1608)
R130	1-216-817-91	RES, CHIP 470	(1608)
R131	1-216-833-91	RES, CHIP 10K	(1608)
R132	1-216-833-91	RES, CHIP 10K	(1608)
R133	1-216-833-91	RES, CHIP 10K	(1608)
R134	1-216-833-91	RES, CHIP 10K	(1608)
R135	1-216-864-91	CONDUCTOR, CHIP	(1608)
R136	1-216-864-91	CONDUCTOR, CHIP	(1608)
R138	1-216-864-91	CONDUCTOR, CHIP	(1608)
R145	1-216-821-91	RES, CHIP 1.0K	(1608)
R146	1-216-821-91	RES, CHIP 1.0K	(1608)
R147	1-216-821-91	RES, CHIP 1.0K	(1608)
R185	1-216-829-91	RES, CHIP 4.7K	(1608)
R188	1-216-829-91	RES, CHIP 4.7K	(1608)
R196	1-216-801-91	RES, CHIP 22	(1608)
R201	1-216-864-91	CONDUCTOR, CHIP	(1608)(GH-005)
R202	1-216-833-91	RES, CHIP 10K	(1608)
R203	1-216-864-91	CONDUCTOR, CHIP	(1608)(GH-004)
R205	1-216-864-91	CONDUCTOR, CHIP	(1608)(GH-004)
R208	1-216-864-91	CONDUCTOR, CHIP	(1608)(GH-004)
R209	1-218-828-91	RES, CHIP 130	(1608)(GH-005)
R212	1-216-864-91	CONDUCTOR, CHIP	(1608)(GH-004)
R213	1-216-864-91	CONDUCTOR, CHIP	(1608)(GH-004)
R215	1-216-864-91	CONDUCTOR, CHIP	(1608)(GH-004)
R216	1-216-809-91	RES, CHIP 100	(1608)(GH-004)
R217	1-218-859-91	RES, CHIP 3.3K	(1608)
R218	1-218-847-91	RES, CHIP 1.0K	(1608)
R219	1-218-851-91	RES, CHIP 1.5K	(1608)
R220	1-216-801-91	RES, CHIP 22	(1608)
R225	1-216-833-91	RES, CHIP 10K	(1608)(GH-004)
R225	1-216-829-91	RES, CHIP 4.7K	(1608)(GH-005)
R226	1-218-965-81	RES, CHIP 10K	
R227	1-216-864-91	CONDUCTOR, CHIP	(1608)(GH-004)
R228	1-218-965-81	RES, CHIP 10K	
R233	1-216-821-91	RES, CHIP 1.0K	(1608)
R236	1-216-809-91	RES, CHIP 100	(1608)
R237	1-216-829-91	RES, CHIP 4.7K	(1608)
R244	1-218-831-91	RES, CHIP 220	(1608)
R245	1-218-831-91	RES, CHIP 220	(1608)
R246	1-218-831-91	RES, CHIP 220	(1608)
R247	1-216-801-91	RES, CHIP 22	(1608)
R251	1-216-839-91	RES, CHIP 33K	(1608)
R252	1-216-839-91	RES, CHIP 33K	(1608)
R253	1-216-833-91	RES, CHIP 10K	(1608)
R257	1-216-824-91	RES, CHIP 1.8K	(1608)
R258	1-218-883-91	RES, CHIP 33K	(1608)
R259	1-216-824-91	RES, CHIP 1.8K	(1608)
R261	1-216-829-91	RES, CHIP 4.7K	(1608)
R263	1-216-825-91	RES, CHIP 2.2K	(1608)
R264	1-216-821-91	RES, CHIP 1.0K	(1608)
R265	1-216-821-91	RES, CHIP 1.0K	(1608)
R270	1-218-853-91	RES, CHIP 1.8K	(1608)
R272	1-218-859-91	RES, CHIP 3.3K	(1608)
R273	1-218-851-91	RES, CHIP 1.5K	(1608)
R277	1-218-853-91	RES, CHIP 1.8K	(1608)
R278	1-218-859-91	RES, CHIP 3.3K	(1608)
R279	1-218-851-91	RES, CHIP 1.5K	(1608)
R292	1-216-833-91	RES, CHIP 10K	(1608)
R294	1-216-829-91	RES, CHIP 4.7K	(1608)
R295	1-216-817-91	RES, CHIP 470	(1608)(GH-004)
R307	1-211-987-91	RES, CHIP 56	(1608)
R308	1-218-864-91	RES, CHIP 5.1K	(1608)
R309	1-211-987-91	RES, CHIP 56	(1608)
R310	1-211-987-91	RES, CHIP 56	(1608)
R311	1-216-829-91	RES, CHIP 4.7K	(1608)
R312	1-211-987-91	RES, CHIP 56	(1608)
R315	1-218-866-91	RES, CHIP 6.2K	(1608)
R316	1-216-797-91	RES, CHIP 10	(1608)
R318	1-216-864-91	CONDUCTOR, CHIP	(1608)
R320	1-219-570-91	RES, CHIP 10M	(1608)
R321	1-216-813-91	RES, CHIP 220	(1608)
R322	1-218-989-81	RES, CHIP 1M	
R324	1-218-965-81	RES, CHIP 10K	
R327	1-216-833-91	RES, CHIP 10K	(1608)
R328	1-216-841-91	RES, CHIP 47K	(1608)
R330	1-216-803-91	RES, CHIP 33	(1608)
R331	1-216-864-91	CONDUCTOR, CHIP	(1608)
R332	1-216-817-91	RES, CHIP 470	(1608)
R333	1-216-817-91	RES, CHIP 470	(1608)
R334	1-216-829-91	RES, CHIP 4.7K	(1608)
R335	1-216-829-91	RES, CHIP 4.7K	(1608)
R336	1-216-821-91	RES, CHIP 1.0K	(1608)
R347	1-211-986-91	RES, CHIP 51	(1608)
R349	1-216-821-91	RES, CHIP 1.0K	(1608)
R350	1-216-807-91	RES, CHIP 68	(1608)
R351	1-216-805-91	RES, CHIP 47	(1608)
R352	1-216-797-91	RES, CHIP 10	(1608)
R355	1-218-933-81	RES, CHIP 22	
R356	1-216-801-91	RES, CHIP 22	(1608)
R357	1-218-933-81	RES, CHIP 22	
R358	1-218-933-81	RES, CHIP 22	
R359	1-216-801-91	RES, CHIP 22	(1608)
R360	1-216-805-91	RES, CHIP 47	(1608)
R361	1-216-805-91	RES, CHIP 47	(1608)
R362	1-218-937-81	RES, CHIP 47	
R363	1-216-864-91	CONDUCTOR, CHIP	(1608)
R364	1-216-805-91	RES, CHIP 47	(1608)
R365	1-216-805-91	RES, CHIP 47	(1608)
R366	1-218-937-81	RES, CHIP 47	
R367	1-216-805-91	RES, CHIP 47	(1608)
R368	1-216-805-91	RES, CHIP 47	(1608)
R394	1-216-833-91	RES, CHIP 10K	(1608)
R395	1-216-825-91	RES, CHIP 2.2K	(1608)
R401	1-218-989-81	RES, CHIP 1M	
R402	1-218-977-81	RES, CHIP 100K	
R403	1-216-025-91	RES, CHIP 100	(2012)
R404	1-216-025-91	RES, CHIP 100	(2012)
R405	1-216-025-91	RES, CHIP 100	(2012)
R406	1-216-025-91	RES, CHIP 100	(2012)
R407	1-216-025-91	RES, CHIP 100	(2012)
R408	1-216-025-91	RES, CHIP 100	(2012)
R410	1-216-864-91	CONDUCTOR, CHIP	(1608)(GH-005)
R422	1-218-985-81	RES, CHIP 470K	
R423	1-218-863-91	RES, CHIP 4.7K	(1608)
R424	1-218-871-91	RES, CHIP 10K	(1608)
R425	1-218-985-81	RES, CHIP 470K	
R503	1-216-803-91	RES, CHIP 33	(1608)
R504	1-216-803-91	RES, CHIP 33	(1608)
R505	1-216-803-91	RES, CHIP 33	(1608)
R506	1-216-809-91	RES, CHIP 100	(1608)
R507	1-218-937-81	RES, CHIP 47	
R509	1-216-821-91	RES, CHIP 1.0K	(1608)
R511	1-216-806-91	RES, CHIP 56	(1608)
R513	1-218-937-81	RES, CHIP 47	
R514	1-216-806-91	RES, CHIP 56	(1608)
R515	1-216-806-91	RES, CHIP 56	(1608)
R516	1-218-941-81	RES, CHIP 100	
R517	1-218-941-81	RES, CHIP 100	
R520	1-216-806-91	RES, CHIP 56	(1608)
R521	1-216-806-91	RES, CHIP 56	(1608)
R522	1-216-833-91	RES, CHIP 10K	(1608)
R527	1-216-821-91	RES, CHIP 1.0K	(1608)
R531	1-216-809-91	RES, CHIP 100	(1608)
R574	1-216-812-91	RES, CHIP 180	(1608)
R601	1-216-864-91	CONDUCTOR, CHIP	(1608)
R604	1-216-845-91	RES, CHIP 100K	(1608)
R606	1-216-833-91	RES, CHIP 10K	(1608)
R607	1-218-965-81	RES, CHIP 10K	
R610	1-216-849-91	RES, CHIP 220K	(1608)
R611	1-216-849-91	RES, CHIP 220K	(1608)
R612	1-218-896-91	RES, CHIP 110K	(1608)
R613	1-216-833-91	RES, CHIP 10K	(1608)

Reproduction Prohibited

Ref.	Part No.	Description	
R614	1-218-965-81	RES, CHIP 10K	
R615	1-216-864-91	CONDUCTOR, CHIP	(1608)
R616	1-216-864-91	CONDUCTOR, CHIP	(1608)
R618	1-216-845-91	RES, CHIP 100K	(1608)
R619	1-216-833-91	RES, CHIP 10K	(1608)
R620	1-216-833-91	RES, CHIP 10K	(1608)
R621	1-216-839-91	RES, CHIP 33K	(1608)
R623	1-216-837-91	RES, CHIP 22K	(1608)
R624	1-216-850-91	RES, CHIP 270K	(1608)
R625	1-216-839-91	RES, CHIP 33K	(1608)
R626	1-218-965-81	RES, CHIP 10K	
R627	1-216-835-91	RES, CHIP 15K	(1608)
R628	1-216-844-91	RES, CHIP 82K	(1608)
R629	1-216-833-91	RES, CHIP 10K	(1608)
R630	1-216-837-91	RES, CHIP 22K	(1608)
R631	1-216-821-91	RES, CHIP 1.0K	(1608)
R632	1-216-821-91	RES, CHIP 1.0K	(1608)
R633	1-216-821-91	RES, CHIP 1.0K	(1608)
R634	1-216-821-91	RES, CHIP 1.0K	(1608)
R636	1-216-864-91	CONDUCTOR, CHIP	(1608)
R640	1-216-837-91	RES, CHIP 22K	(1608)
R642	1-218-965-81	RES, CHIP 10K	
R643	1-216-850-91	RES, CHIP 270K	(1608)
R644	1-216-837-91	RES, CHIP 22K	(1608)
R649	1-216-833-91	RES, CHIP 10K	(1608)
R650	1-218-965-81	RES, CHIP 10K	
R651	1-216-835-91	RES, CHIP 15K	(1608)
R653	1-216-845-91	RES, CHIP 100K	(1608)
R654	1-218-977-81	RES, CHIP 100K	
R657	1-218-971-81	RES, CHIP 33K	
R658	1-218-965-81	RES, CHIP 10K	
R660	1-216-833-91	RES, CHIP 10K	(1608)
R661	1-216-833-91	RES, CHIP 10K	(1608)
R662	1-216-864-91	CONDUCTOR, CHIP	(1608)
R667	1-216-861-91	RES, CHIP 2.2M	(1608)
R668	1-218-985-81	RES, CHIP 470K	
R669	1-218-977-81	RES, CHIP 100K	
R670	1-218-965-81	RES, CHIP 10K	
R671	1-218-959-81	RES, CHIP 3.3K	
R672	1-218-888-91	RES, CHIP 51K	(1608)
R673	1-218-959-81	RES, CHIP 3.3K	
R674	1-218-977-81	RES, CHIP 100K	
R675	1-218-971-81	RES, CHIP 33K	
R678	1-216-829-91	RES, CHIP 4.7K	(1608)
R689	1-218-977-81	RES, CHIP 100K	
R694	1-216-835-91	RES, CHIP 15K	(1608)
R696	1-216-846-91	RES, CHIP 120K	(1608)
R698	1-216-835-91	RES, CHIP 15K	(1608)
R699	1-216-864-91	CONDUCTOR, CHIP	(1608)(GH-005)
R751	1-216-815-91	RES, CHIP 330	(1608)
R752	1-216-810-91	RES, CHIP 120	(1608)
R753	1-216-298-91	RES, CHIP 2.2	(2012)
R754	1-216-298-91	RES, CHIP 2.2	(2012)
R755	1-216-298-91	RES, CHIP 2.2	(2012)
R756	1-216-298-91	RES, CHIP 2.2	(2012)
R759	1-216-833-91	RES, CHIP 10K	(1608)
R777	1-216-845-91	RES, CHIP 100K	(1608)
R782	1-216-833-91	RES, CHIP 10K	(1608)(GH-004)
R782	1-216-864-91	CONDUCTOR, CHIP	(1608)(GH-005)
R785	1-218-887-91	RES, CHIP 47K	(1608)
R787	1-218-892-91	RES, CHIP 75K	(1608)
R788	1-218-887-91	RES, CHIP 47K	(1608)
R791	1-218-892-91	RES, CHIP 75K	(1608)
R792	1-218-899-91	RES, CHIP 150K	(1608)
R793	1-218-899-91	RES, CHIP 150K	(1608)
R794	1-218-899-91	RES, CHIP 150K	(1608)

Ref.	Part No.	Description	
R795	1-218-899-91	RES, CHIP 150K	(1608)
R796	1-216-864-91	CONDUCTOR, CHIP	(1608)
R797	1-216-864-91	CONDUCTOR, CHIP	(1608)
R901	1-216-805-91	RES, CHIP 47	(1608)
R902	1-216-805-91	RES, CHIP 47	(1608)
R974	1-216-801-91	RES, CHIP 22	(1608)
R975	1-216-801-91	RES, CHIP 22	(1608)
R984	1-216-864-91	CONDUCTOR, CHIP	(1608)
RB101	1-234-496-21	ARRAY, RESISTOR 39	
RB102	1-234-496-21	ARRAY, RESISTOR 39	
RB103	1-234-496-21	ARRAY, RESISTOR 39	
RB104	1-234-496-21	ARRAY, RESISTOR 39	
RB105	1-234-496-21	ARRAY, RESISTOR 39	
RB106	1-234-496-21	ARRAY, RESISTOR 39	
RB107	1-233-423-21	RES, CHIP NETWORK 47 (3216) (GH-004)	
RB107	1-233-575-21	RES, CHIP NETWORK 22 (GH-005)	
RB108	1-233-423-21	RES, CHIP NETWORK 47 (3216) (GH-004)	
RB108	1-233-575-21	RES, CHIP NETWORK 22 (GH-005)	
RB109	1-233-423-21	RES, CHIP NETWORK 47 (3216) (GH-004)	
RB109	1-233-575-21	RES, CHIP NETWORK 22 (GH-005)	
RB110	1-233-423-21	RES, CHIP NETWORK 47 (3216) (GH-004)	
RB110	1-233-575-21	RES, CHIP NETWORK 22 (GH-005)	
RB111	1-233-423-21	RES, CHIP NETWORK 47 (3216) (GH-004)	
RB111	1-233-575-21	RES, CHIP NETWORK 22 (GH-005)	
RB112	1-233-423-21	RES, CHIP NETWORK 47 (3216) (GH-004)	
RB112	1-233-575-21	RES, CHIP NETWORK 22 (GH-005)	
RB113	1-233-423-21	RES, CHIP NETWORK 47 (3216) (GH-004)	
RB113	1-233-575-21	RES, CHIP NETWORK 22 (GH-005)	
RB114	1-233-423-21	RES, CHIP NETWORK 47 (3216) (GH-004)	
RB114	1-233-575-21	RES, CHIP NETWORK 22 (GH-005)	
RB115	1-233-423-21	RES, CHIP NETWORK 47 (3216) (GH-004)	
RB115	1-233-575-21	RES, CHIP NETWORK 22 (GH-005)	
RB116	1-233-423-21	RES, CHIP NETWORK 47 (3216) (GH-004)	
RB116	1-233-575-21	RES, CHIP NETWORK 22 (GH-005)	
RB117	1-233-423-21	RES, CHIP NETWORK 47 (3216) (GH-004)	
RB117	1-233-575-21	RES, CHIP NETWORK 22 (GH-005)	
RB118	1-233-423-21	RES, CHIP NETWORK 47 (3216) (GH-004)	
RB118	1-233-575-21	RES, CHIP NETWORK 22 (GH-005)	
RB119	1-233-423-21	RES, CHIP NETWORK 47 (3216) (GH-004)	
RB119	1-233-575-21	RES, CHIP NETWORK 22 (GH-005)	
RB120	1-233-423-21	RES, CHIP NETWORK 47 (3216) (GH-004)	
RB120	1-233-575-21	RES, CHIP NETWORK 22 (GH-005)	
RB121	1-233-423-21	RES, CHIP NETWORK 47 (3216) (GH-004)	
RB121	1-233-575-21	RES, CHIP NETWORK 22 (GH-005)	
RB122	1-233-423-21	RES, CHIP NETWORK 47 (3216) (GH-004)	
RB122	1-233-575-21	RES, CHIP NETWORK 22 (GH-005)	
RB123	1-233-423-21	RES, CHIP NETWORK 47 (3216) (GH-004)	
RB123	1-233-575-21	RES, CHIP NETWORK 22 (GH-005)	
RB124	1-233-423-21	RES, CHIP NETWORK 47 (3216) (GH-004)	
RB124	1-233-575-21	RES, CHIP NETWORK 22 (GH-005)	
RB125	1-233-423-21	RES, CHIP NETWORK 47 (3216) (GH-004)	
RB125	1-233-575-21	RES, CHIP NETWORK 22 (GH-005)	
RB126	1-233-423-21	RES, CHIP NETWORK 47 (3216) (GH-004)	
RB126	1-233-575-21	RES, CHIP NETWORK 22 (GH-005)	
RB130	1-233-423-21	RES, CHIP NETWORK 47 (3216)	
RB131	1-233-423-21	RES, CHIP NETWORK 47 (3216)	
RB132	1-233-423-21	RES, CHIP NETWORK 47 (3216)	
RB133	1-233-423-21	RES, CHIP NETWORK 47 (3216)	
RB134	1-233-423-21	RES, CHIP NETWORK 47 (3216)	
RB135	1-233-423-21	RES, CHIP NETWORK 47 (3216)	
RB136	1-233-423-21	RES, CHIP NETWORK 47 (3216)	
RB137	1-233-423-21	RES, CHIP NETWORK 47 (3216)	
RB139	1-233-414-21	RES, CHIP NETWORK 4.7K (3216)	
RB241	1-233-414-21	RES, CHIP NETWORK 4.7K (3216)	
RB294	1-233-414-21	RES, CHIP NETWORK 4.7K (3216)	
RB295	1-233-412-21	RES, CHIP NETWORK 1.0K (3216)	

Ref.	Part No.	Description	
RB296	1-234-598-21	RES, CHIP NETWORK 75X4	(3216)
RB297	1-234-599-21	RES, CHIP NETWORK 180X4	(3216)
RB298	1-234-598-21	RES, CHIP NETWORK 75X4	(3216)
RB303	1-233-412-21	RES, CHIP NETWORK 1.0K	(3216)
RB305	1-233-575-21	RES, CHIP NETWORK 22	
RB310	1-233-414-21	RES, CHIP NETWORK 4.7K	(3216)
RB311	1-233-679-91	RES, NETWORK (1608) 470	
RB312	1-233-786-91	RES, NETWORK 220	(1608)
RB314	1-233-681-91	RES, NETWORK (1608) 4.7K	
RB317	1-233-423-21	RES, CHIP NETWORK 47	(3216)
RB318	1-233-423-21	RES, CHIP NETWORK 47	(3216)
RB319	1-233-423-21	RES, CHIP NETWORK 47	(3216)
RB320	1-233-423-21	RES, CHIP NETWORK 47	(3216)
RB321	1-233-423-21	RES, CHIP NETWORK 47	(3216)
RB322	1-233-412-21	RES, CHIP NETWORK 1.0K	(3216)
RB323	1-233-412-21	RES, CHIP NETWORK 1.0K	(3216)
RB324	1-233-412-21	RES, CHIP NETWORK 1.0K	(3216)
RB325	1-233-412-21	RES, CHIP NETWORK 1.0K	(3216)
RB326	1-233-412-21	RES, CHIP NETWORK 1.0K	(3216)
RB327	1-233-415-21	RES, CHIP NETWORK 10K	(3216)
RB328	1-233-414-21	RES, CHIP NETWORK 4.7K	(3216)
RB329	1-233-783-91	RES, NETWORK 22	(1608)
RB511	1-233-423-21	RES, CHIP NETWORK 47	(3216)
RB512	1-234-610-21	RES, CHIP NETWORK 270K	(3216)
RB514	1-233-576-21	RES, CHIP NETWORK 100	
RB515	1-234-611-21	RES, CHIP NETWORK 560	(3216)
RB516	1-233-415-21	RES, CHIP NETWORK 10K	(3216)
RB517	1-233-575-21	RES, CHIP NETWORK 22	
RB518	1-233-575-21	RES, CHIP NETWORK 22	
RB519	1-233-575-21	RES, CHIP NETWORK 22	
RB520	1-233-575-21	RES, CHIP NETWORK 22	
RB521	1-233-575-21	RES, CHIP NETWORK 22	
RB522	1-233-575-21	RES, CHIP NETWORK 22	
RB523	1-233-575-21	RES, CHIP NETWORK 22	
RB524	1-233-575-21	RES, CHIP NETWORK 22	
RB525	1-233-575-21	RES, CHIP NETWORK 22	
RB526	1-233-575-21	RES, CHIP NETWORK 22	
RB527	1-233-575-21	RES, CHIP NETWORK 22	
RB528	1-233-575-21	RES, CHIP NETWORK 22	
RB529	1-233-575-21	RES, CHIP NETWORK 22	
RB530	1-233-575-21	RES, CHIP NETWORK 22	
RB531	1-233-575-21	RES, CHIP NETWORK 22	
RB532	1-233-575-21	RES, CHIP NETWORK 22	
RB602	1-233-415-21	RES, CHIP NETWORK 10K	(3216)
RB603	1-233-415-21	RES, CHIP NETWORK 10K	(3216)
RB606	1-233-412-21	RES, CHIP NETWORK 1.0K	(3216)
RB607	1-233-415-21	RES, CHIP NETWORK 10K	(3216)
RB609	1-233-423-21	RES, CHIP NETWORK 47	(3216)
RB611	1-233-415-21	RES, CHIP NETWORK 10K	(3216)
RB701	1-233-578-21	RES, CHIP NETWORK 47K	
RB702	1-233-578-21	RES, CHIP NETWORK 47K	
		<CRYSTAL>	
X101	1-781-640-21	VIBRATOR, CRYSTAL (GH-004)	
X201	1-781-640-21	VIBRATOR, CRYSTAL (GH-005)	
X202	1-781-857-21	OSCILLATOR, CRYSTAL	
X301	1-781-856-21	VIBRATOR, CRYSTAL	

****

A-6712-761-A MOUNTED CIRCUIT BOARD, GD-011
A-6712-817-A MOUNTED CIRCUIT BOARD, GD-012
****
PLACE CODE #25GH

<BATTERY>

⚠ BT401 1-756-076-21 HOLDER, LITHIUM BATTERY

Ref.	Part No.	Description	
		<CAPACITOR>	
C401	1-107-826-91	CAP, CHIP CERAMIC 100000PF B	
C402	1-164-505-91	CAP, CHIP CERAMIC 2.2MF F	(2012)
C403	1-162-964-91	CAP,CHIP CERAMIC 1000PF B	(1608)
C404	1-125-837-91	CAP, CHIP CERAMIC 1MF B	(1608)(GD-011)
C405	1-107-826-91	CAP, CHIP CERAMIC 100000PF B	
C407	1-107-826-91	CAP, CHIP CERAMIC 100000PF B	
C408	1-125-837-91	CAP, CHIP CERAMIC 1MF B	(1608)
C409	1-162-969-91	CAP, CHIP CERAMIC 6800PF B	(1608)
C410	1-162-969-91	CAP, CHIP CERAMIC 6800PF B	(1608)(GD-011)
C414	1-162-965-91	CAP, CHIP CERAMIC 1500PF B	(1608)
C415	1-162-965-91	CAP, CHIP CERAMIC 1500PF B	(1608)
C416	1-107-826-91	CAP, CHIP CERAMIC 100000PF B	
C417	1-164-379-91	CAP, CHIP CERAMIC 43PF CH	(1608)
C418	1-107-826-91	CAP, CHIP CERAMIC 100000PF B	
C419	1-162-970-91	CAP, CHIP CERAMIC 10000PF B	(1608)
C420	1-107-826-91	CAP, CHIP CERAMIC 100000PF B	
C421	1-124-779-21	CAP, ELECT 10MF	
C422	1-135-347-21	CAP, SOLID ELECT 82MF	
C423	1-135-347-21	CAP, SOLID ELECT 82MF	
C424	1-124-779-21	CAP, ELECT 10MF	
C425	1-128-995-21	CAP, ELECT 100MF	
C426	1-107-826-91	CAP, CHIP CERAMIC 100000PF B	
C427	1-135-347-21	CAP, SOLID ELECT 82MF	
C430	1-107-826-91	CAP, CHIP CERAMIC 100000PF B	
C431	1-107-826-91	CAP, CHIP CERAMIC 100000PF B	
C432	1-115-339-91	CAP, CHIP CERAMIC 0.1MF B	(2012)
C433	1-115-339-91	CAP, CHIP CERAMIC 0.1MF B	(2012)
C434	1-162-964-91	CAP,CHIP CERAMIC 1000PF B	(1608)
C435	1-115-566-91	CAP, CHIP CERAMIC 4.7MF B	
C436	1-135-593-21	CAP, ELECT 150MF	
C437	1-107-826-91	CAP, CHIP CERAMIC 100000PF B	
C438	1-107-826-91	CAP, CHIP CERAMIC 100000PF B	
C439	1-135-593-21	CAP, ELECT 150MF	
C440	1-131-995-21	CAP, SOLID ELECT 100MF	
C441	1-135-593-21	CAP, ELECT 150MF	
C443	1-131-995-21	CAP, SOLID ELECT 100MF	
C444	1-107-826-91	CAP, CHIP CERAMIC 100000PF B	
C445	1-117-720-91	CAP, CHIP CERAMIC 4.7MF F	(2012)
C446	1-131-995-21	CAP, SOLID ELECT 100MF	
C447	1-107-682-91	CAP, CHIP CERAMIC 1000000PF B	(3216)
C449	1-162-964-91	CAP,CHIP CERAMIC 1000PF B	(1608)
C450	1-107-826-91	CAP, CHIP CERAMIC 100000PF B	
C452	1-164-156-91	CAP, CHIP CERAMIC 0.1MF F	(1608)
C453	1-164-156-91	CAP, CHIP CERAMIC 0.1MF F	(1608)
C454	1-124-779-21	CAP, ELECT 10MF	
C455	1-124-779-21	CAP, ELECT 10MF	
C456	1-124-779-21	CAP, ELECT 10MF	
C457	1-124-779-21	CAP, ELECT 10MF	
C458	1-135-347-21	CAP, SOLID ELECT 82MF	
C459	1-135-347-21	CAP, SOLID ELECT 82MF	
C460	1-164-174-91	CAP,CHIP CERAMIC 8200PF B	(1608)
C461	1-164-174-91	CAP,CHIP CERAMIC 8200PF B	(1608)
C462	1-135-347-21	CAP, SOLID ELECT 82MF	
C465	1-107-826-91	CAP, CHIP CERAMIC 100000PF B	
C466	1-107-826-91	CAP, CHIP CERAMIC 100000PF B	
C467	1-126-209-21	CAP, ELECT 100MF	
C468	1-126-209-21	CAP, ELECT 100MF	
C469	1-162-977-91	CAP, CHIP CERAMIC 1800PF B	(1608)
C470	1-107-826-91	CAP, CHIP CERAMIC 100000PF B	
C471	1-164-379-91	CAP, CHIP CERAMIC 43PF CH	(1608)
C472	1-107-826-91	CAP, CHIP CERAMIC 100000PF B	
C473	1-162-970-91	CAP, CHIP CERAMIC 10000PF B	(1608)
C474	1-107-826-91	CAP, CHIP CERAMIC 100000PF B	
C475	1-164-730-91	CAP,CHIP CERAMIC 1200PF B	(1608)
C476	1-115-339-91	CAP, CHIP CERAMIC 0.1MF B	(2012)

Reproduction Prohibited

Ref.	Part No.	Description
C477	1-124-779-21	CAP, ELECT 10MF
C478	1-124-779-21	CAP, ELECT 10MF (GD-011)
C479	1-125-837-91	CAP, CHIP CERAMIC 1MF B (1608)
C480	1-115-339-91	CAP, CHIP CERAMIC 0.1MF B (2012)
C481	1-135-593-21	CAP, ELECT 150MF
C482	1-107-826-91	CAP, CHIP CERAMIC 100000PF B
C483	1-107-826-91	CAP, CHIP CERAMIC 100000PF B
C484	1-135-593-21	CAP, ELECT 150MF
C485	1-107-826-91	CAP, CHIP CERAMIC 100000PF B
C486	1-131-999-21	CAP, SOLID ELECT 150MF
C487	1-131-999-21	CAP, SOLID ELECT 150MF
C488	1-115-566-91	CAP, CHIP CERAMIC 4.7MF B
C489	1-131-999-21	CAP, SOLID ELECT 150MF
C490	1-135-593-21	CAP, ELECT 150MF
C491	1-126-209-21	CAP, ELECT 100MF (GD-011)
C492	1-107-826-91	CAP, CHIP CERAMIC 100000PF B
C493	1-107-826-91	CAP, CHIP CERAMIC 100000PF B
C494	1-107-725-91	CAP, CHIP CERAMIC 100000PF B (2012)
C495	1-125-837-91	CAP, CHIP CERAMIC 1MF B (1608)(GD-011)
C496	1-107-682-91	CAP, CHIP CERAMIC 1000000PF B(3216) (GD-012)
C497	1-162-964-91	CAP,CHIP CERAMIC 1000PF B(1608)(GD-011)
C498	1-124-779-21	CAP, ELECT 10MF
C499	1-164-505-91	CAP, CHIP CERAMIC 2.2MF F (2012)
C500	1-137-765-21	CAP, ELECT 47MF
C501	1-126-205-21	CAP, ELECT 47MF
C502	1-162-964-91	CAP,CHIP CERAMIC 1000PF B (1608)
C503	1-137-766-21	CAP, ELECT 68MF
C504	1-163-009-91	CAP,CHIP CERAMIC 1000PF B (2012)
C505	1-137-765-21	CAP, ELECT 47MF
C506	1-137-765-21	CAP, ELECT 47MF
C507	1-162-964-91	CAP,CHIP CERAMIC 1000PF B (1608)
C508	1-137-765-21	CAP, ELECT 47MF
C509	1-137-766-21	CAP, ELECT 68MF
C510	1-137-765-21	CAP, ELECT 47MF
C511	1-137-765-21	CAP, ELECT 47MF
C514	1-126-198-21	CAP, ELECT 4.7MF (GD-012)
		<CONNECTOR>
CN401	1-815-121-11	PIN, CONNECTOR (GD-AC) 4P
CN403	1-815-142-11	CONNECTOR, BOARD TO BOARD 120P
D401	8-719-988-61	DIODE 1SS355TE-17
D402	8-719-074-34	DIODE RB495D-T146
D403	8-719-074-34	DIODE RB495D-T146
D404	8-719-033-15	DIODE HN2D02FU-TE85R
D405	8-719-078-04	DIODE EC31QS03L-TE12L
		<DIODE>
D407	8-719-074-34	DIODE RB495D-T146
D408	8-719-074-34	DIODE RB495D-T146
		<FUSE>
F401	1-576-438-21	FUSE, CHIP
F402	1-576-434-21	FUSE, CHIP
F403	1-576-434-21	FUSE, CHIP
F404	1-576-434-21	FUSE, CHIP
		<IC>
IC401	8-759-661-25	IC S-80769SN-J0-T1
IC402	8-759-826-59	IC TMP87C807U-1V33
IC403	8-759-688-08	IC MM1537DFBE
IC404	8-759-689-89	IC SN104809DBTR
IC405	8-759-560-17	IC RS5C348A-E2
IC406	8-759-667-20	IC BR9080F-E2
IC407	8-759-712-66	IC PQ018PZ01ZP
IC408	8-759-712-65	IC PQ070XZ01ZP
IC409	8-759-689-89	IC SN104809DBTR
IC410	8-749-018-42	IC SI-3026LSA-TL
IC411	8-759-688-06	IC MM3031J
IC412	8-749-018-41	IC SI-3025LSA-TL (GD-011)
IC413	8-759-665-28	IC SI-3034LSA-TL
IC414	8-759-069-41	IC TA7808F(TE16L)
		<INDUCTOR>
L401	1-416-948-21	COIL, CHOKE 10UH
L402	1-416-948-21	COIL, CHOKE 10UH
L403	1-419-491-21	COIL, CHOKE 10UH (GD-012)
L403	1-419-896-21	COIL, CHOKE 4.2UH
L403	1-419-649-21	COIL, CHOKE 10UH (GD-012)
L403	1-419-897-21	COIL, CHOKE 4.2UH (GD-011)
L403	1-419-903-21	COIL (SMD), CHOKE 4.2UH (GD-011)
L404	1-419-648-21	COIL, CHOKE 2.0UH
L405	1-416-948-21	COIL, CHOKE 10UH
L406	1-419-491-21	COIL, CHOKE 10UH
L407	1-419-491-21	COIL, CHOKE 10UH
L408	1-419-898-21	COIL, CHOKE 5.6UH
L409	1-469-966-21	INDUCTOR, CHIP 1UH (2518)
		<LINK>
⚠ PS401	1-533-674-21	RINK, CHIP IC
⚠ PS402	1-533-940-21	RINK, CHIP IC
⚠ PS403	1-533-940-21	RINK, CHIP IC
⚠ PS404	1-533-940-21	RINK, CHIP IC
⚠ PS405	1-533-940-21	RINK, CHIP IC (GD-011)
⚠ PS406	1-533-915-41	RINK, CHIP IC
⚠ PS407	1-533-282-21	LINK, IC
⚠ PS408	1-576-282-21	RINK, SQUARE CHIP TYPE IC
⚠ PS409	1-533-915-41	RINK, CHIP IC
⚠ PS410	1-533-282-21	LINK, IC
⚠ PS411	1-533-674-21	RINK, CHIP IC
		<TRANSISTOR>
Q401	8-729-051-63	TRANSISTOR SI4884DY-T1
Q402	8-729-053-79	TRANSISTOR IRF7901D1-TR
Q404	8-729-052-07	TRANSISTOR HAT2064R-EL
Q405	8-729-427-47	TRANSISTOR XP4213-TXE
Q406	8-729-053-79	TRANSISTOR IRF7901D1-TR
Q407	8-729-046-04	TRANSISTOR FDS6690A
Q408	8-729-051-61	TRANSISTOR IRF7807D1-TR
Q409	8-729-427-47	TRANSISTOR XP4213-TXE
Q410	8-729-029-14	TRANSISTOR DTC144EUA-T106
Q411	8-729-043-74	TRANSISTOR SI4435DY-T1-REVA
Q412	8-729-043-74	TRANSISTOR SI4435DY-T1-REVA
Q413	8-729-029-14	TRANSISTOR DTC144EUA-T106 (GD-012)
Q414	8-729-043-74	TRANSISTOR SI4435DY-T1-REVA
Q415	8-729-028-91	TRANSISTOR DTA144EUA-T106 (GD-012)
		<RESISTOR>
R401	1-216-837-91	RES, CHIP 22K (1608)(GD-011)
R402	1-216-837-91	RES, CHIP 22K (1608)(GD-011)
R403	1-216-849-91	RES, CHIP 220K (1608)(GD-011)
R404	1-216-845-91	RES, CHIP 100K (1608)(GD-011)
R405	1-216-845-91	RES, CHIP 100K (1608)(GD-011)
R406	1-216-811-91	RES, CHIP 150 (1608)(GD-011)
R407	1-216-811-91	RES, CHIP 150 (1608)(GD-011)
R408	1-216-864-91	CONDUCTOR, CHIP (1608)(GD-012)
R408	1-216-839-91	RES, CHIP 33K (1608)(GD-011)
R409	1-218-835-91	RES, CHIP 330 (1608)
R410	1-218-883-91	RES, CHIP 33K (1608)
R411	1-218-883-91	RES, CHIP 33K (1608)
R412	1-218-883-91	RES, CHIP 33K (1608)
R413	1-218-883-91	RES, CHIP 33K (1608)(GD-011)
R413	1-218-891-91	RES, CHIP 68K (1608)(GD-012)
R414	1-218-835-91	RES, CHIP 330 (1608)(GD-011)
R414	1-218-853-91	RES, CHIP 1.8K (1608)(GD-012)
R415	1-216-839-91	RES, CHIP 33K (1608)(GD-011)
R416	1-216-839-91	RES, CHIP 33K (1608)(GD-011)
R417	1-216-813-91	RES, CHIP 220 (1608)
R418	1-216-837-91	RES, CHIP 22K (1608)(GD-012)
R418	1-216-817-91	RES, CHIP 470 (1608)(GD-011)
R419	1-216-829-91	RES, CHIP 4.7K (1608)(GD-012)
R419	1-216-833-91	RES, CHIP 10K (1608)(GD-011)
R420	1-216-832-91	RES, CHIP 8.2K (1608)(GD-012)
R420	1-216-833-91	RES, CHIP 10K (1608)(GD-011)
R421	1-216-790-91	RES, CHIP 2.7 (1608)
R422	1-216-797-91	RES, CHIP 10 (1608)
R423	1-216-790-91	RES, CHIP 2.7 (1608)
R424	1-216-797-91	RES, CHIP 10 (1608)
R426	1-218-875-91	RES, CHIP 15K (1608)(GD-012)
R426	1-218-879-91	RES, CHIP 22K (1608)(GD-011)
R427	1-218-875-91	RES, CHIP 15K (1608)
R428	1-216-309-91	RES, CHIP 5.6 (2012)
R429	1-216-833-91	RES, CHIP 10K (1608)
R430	1-216-813-91	RES, CHIP 220 (1608)
R431	1-216-813-91	RES, CHIP 220 (1608)
R432	1-216-829-91	RES, CHIP 4.7K (1608)
R433	1-216-829-91	RES, CHIP 4.7K (1608)
R434	1-216-810-91	RES, CHIP 120 (1608)
R435	1-216-810-91	RES, CHIP 120 (1608)
R438	1-218-850-91	RES, CHIP 1.3K (1608)
R439	1-218-857-91	RES, CHIP 2.7K (1608)
R440	1-218-861-91	RES, CHIP 3.9K (1608)
R441	1-218-879-91	RES, CHIP 22K (1608)
R442	1-218-869-91	RES, CHIP 8.2K (1608)
R443	1-218-865-91	RES, CHIP 5.6K (1608)
R444	1-218-881-91	RES, CHIP 27K (1608)
R445	1-218-849-91	RES, CHIP 1.2K (1608)
R446	1-216-817-91	RES, CHIP 470 (1608)
R447	1-216-817-91	RES, CHIP 470 (1608)
R448	1-216-829-91	RES, CHIP 4.7K (1608)(GD-012)
R448	1-216-833-91	RES, CHIP 10K (1608)(GD-011)
R449	1-216-833-91	RES, CHIP 10K (1608)(GD-011)
R450	1-216-817-91	RES, CHIP 470 (1608)(GD-011)
R451	1-216-813-91	RES, CHIP 220 (1608)(GD-012)
R451	1-216-817-91	RES, CHIP 470 (1608)(GD-011)
R452	1-216-797-91	RES, CHIP 10 (1608)
R453	1-216-797-91	RES, CHIP 10 (1608)
R454	1-216-797-91	RES, CHIP 10 (1608)
R457	1-218-883-91	RES, CHIP 33K (1608)(GD-012)
R455	1-216-845-91	RES, CHIP 100K (1608)(GD-011)
R456	1-216-821-91	RES, CHIP 1.0K (1608)(GD-011)
R457	1-218-883-91	RES, CHIP 33K (1608)(GD-011)
R458	1-216-797-91	RES, CHIP 10 (1608)
R459	1-216-825-91	RES, CHIP 2.2K (1608)(GD-012)
R459	1-216-833-91	RES, CHIP 10K (1608)(GD-011)
R460	1-218-874-91	RES, CHIP 13K (1608)
R461	1-216-309-91	RES, CHIP 5.6 (2012)
R463	1-216-857-91	RES, CHIP 1.0M (1608)(GD-012)
R462	1-216-864-91	CONDUCTOR, CHIP (1608)(GD-011)
R465	1-216-845-91	RES, CHIP 100K (1608)(GD-012)
R463	1-216-857-91	RES, CHIP 1.0M (1608)(GD-011)
R465	1-216-845-91	RES, CHIP 100K (1608)(GD-011)
R466	1-216-833-91	RES, CHIP 10K (1608)
R468	1-216-833-91	RES, CHIP 10K (1608)
R469	1-216-833-91	RES, CHIP 10K (1608)
R470	1-216-837-91	RES, CHIP 22K (1608)(GD-012)
R470	1-216-845-91	RES, CHIP 100K (1608)(GD-011)
R471	1-216-827-91	RES, CHIP 3.3K (1608)(GD-012)
R472	1-216-822-91	RES, CHIP 1.2K (1608)(GD-012)
R473	1-216-837-91	RES, CHIP 22K (1608)(GD-012)
R474	1-216-837-91	RES, CHIP 22K (1608)(GD-012)
R475	1-216-813-91	RES, CHIP 220 (1608)(GD-012)
R476	1-216-816-91	RES, CHIP 390 (1608)(GD-012)
R477	1-216-813-91	RES, CHIP 220 (1608)(GD-012)
R478	1-216-816-91	RES, CHIP 390 (1608)(GD-012)
R479	1-216-813-91	RES, CHIP 220 (1608)(GD-012)
R480	1-216-816-91	RES, CHIP 390 (1608)(GD-012)
R481	1-216-837-91	RES, CHIP 22K (1608)(GD-012)
RB402	1-233-803-91	RES, NETWORK 1.5K (1608)
RB403	1-233-789-91	RES, NETWORK 10K (1608)
RB405	1-233-803-91	RES, NETWORK 1.5K (1608)
RB406	1-233-792-91	RES, NETWORK 100K (1608)
RB407	1-233-795-91	RES, NETWORK 1.0M (1608)
RB408	1-233-415-21	RES, CHIP NETWORK 10K (3216)
RB409	1-233-415-21	RES, CHIP NETWORK 10K (3216)
RB410	1-233-415-21	RES, CHIP NETWORK 10K (3216)
		<THERMISTOR>
⚠ TH401	1-533-817-21	THERMISTOR (GD-012)
⚠ TH401	1-804-291-21	THERMISTOR (GD-011)
⚠ TH402	1-533-817-21	THERMISTOR
⚠ TH403	1-533-817-21	THERMISTOR
		<CRYSTAL>
X401	1-760-496-22	VIBRATOR, LITHIUM NIOBATE
X402	1-781-266-41	VIBRATOR, CRYSTAL

****

A-6712-775-A MOUNTED CIRCUIT BOARD, GM-041
****

PLACE CODE #10

		<CAPACITOR>
C100	1-115-467-91	CAP, CHIP CERAMIC0.22MF B (1608)
C101	1-115-467-91	CAP, CHIP CERAMIC0.22MF B (1608)
C102	1-131-651-21	CAP, TANTALUM ELECT 10MF
C103	1-135-900-21	CAP, TANTALUM ELECT 22MF
C104	1-164-670-91	CAP, CHIP CERAMIC 1200PF SL (1608)
C105	1-131-651-21	CAP, TANTALUM ELECT 10MF
C106	1-135-900-21	CAP, TANTALUM ELECT 22MF
C107	1-164-670-91	CAP, CHIP CERAMIC 1200PF SL (1608)
C108	1-107-826-91	CAP, CHIP CERAMIC 100000PF B
C109	1-164-173-91	CAP, CHIP CERAMIC 3900PF B (1608)
C110	1-164-173-91	CAP, CHIP CERAMIC 3900PF B (1608)
C111	1-115-467-91	CAP, CHIP CERAMIC0.22MF B (1608)
C113	1-165-319-91	CAP, CHIP CERAMIC 100000PF F (2012)
C114	1-127-692-91	CAP, CHIP CERAMIC 10MF B 3225
C115	1-164-816-91	CAP, CHIP CERAMIC CHIP 220PF CH
C116	1-164-816-91	CAP, CHIP CERAMIC CHIP 220PF CH
C117	1-164-816-91	CAP, CHIP CERAMIC CHIP 220PF CH
C118	1-164-816-91	CAP, CHIP CERAMIC CHIP 220PF CH
C119	1-162-927-91	CAP, CHIP CERAMIC 100PF CH (1608)
C120	1-162-927-91	CAP, CHIP CERAMIC 100PF CH (1608)
C121	1-162-927-91	CAP, CHIP CERAMIC 100PF CH (1608)
C122	1-162-927-91	CAP, CHIP CERAMIC 100PF CH (1608)
C123	1-162-927-91	CAP, CHIP CERAMIC 100PF CH (1608)
C124	1-162-927-91	CAP, CHIP CERAMIC 100PF CH (1608)
C127	1-162-927-91	CAP, CHIP CERAMIC 100PF CH (1608)
C128	1-162-927-91	CAP, CHIP CERAMIC 100PF CH (1608)
C129	1-162-927-91	CAP, CHIP CERAMIC 100PF CH (1608)
C130	1-162-927-91	CAP, CHIP CERAMIC 100PF CH (1608)
C140	1-107-826-91	CAP, CHIP CERAMIC 100000PF B
C141	1-107-826-91	CAP, CHIP CERAMIC 100000PF B
C149	1-162-964-91	CAP, CHIP CERAMIC 1000PF B (1608)

Reproduction Prohibited

Ref.	Part No.	Description	
C150	1-162-927-91	CAP, CHIP CERAMIC 100PF CH	(1608)
C151	1-162-927-91	CAP, CHIP CERAMIC 100PF CH	(1608)
C152	1-162-927-91	CAP, CHIP CERAMIC 100PF CH	(1608)
C153	1-162-927-91	CAP, CHIP CERAMIC 100PF CH	(1608)
C154	1-162-966-91	CAP, CHIP CERAMIC 2200PF B	(1608)
C155	1-162-966-91	CAP, CHIP CERAMIC 2200PF B	(1608)
C156	1-162-966-91	CAP, CHIP CERAMIC 2200PF B	(1608)
C157	1-162-966-91	CAP, CHIP CERAMIC 2200PF B	(1608)
C158	1-131-651-21	CAP, TANTALUM ELECT 10MF	
C159	1-107-826-91	CAP, CHIP CERAMIC 100000PF B	
C160	1-131-651-21	CAP, TANTALUM ELECT 10MF	
C161	1-107-826-91	CAP, CHIP CERAMIC 100000PF B	
C163	1-107-826-91	CAP, CHIP CERAMIC 100000PF B	
C165	1-107-826-91	CAP, CHIP CERAMIC 100000PF B	
C166	1-104-851-91	CAP, CHIP TANTALUM ELECT 10MF	
C167	1-107-826-91	CAP, CHIP CERAMIC 100000PF B	
C169	1-107-826-91	CAP, CHIP CERAMIC 100000PF B	
C171	1-107-826-91	CAP, CHIP CERAMIC 100000PF B	
C172	1-131-651-21	CAP, TANTALUM ELECT 10MF	
C173	1-107-826-91	CAP, CHIP CERAMIC 100000PF B	
C174	1-162-975-91	CAP, CHIP CERAMIC 24PF CH	(1608)
C175	1-164-677-91	CAP, CHIP CERAMIC 33000PF B	(1608)
C176	1-107-826-91	CAP, CHIP CERAMIC 100000PF B	
C177	1-107-826-91	CAP, CHIP CERAMIC 100000PF B	
C178	1-107-826-91	CAP, CHIP CERAMIC 100000PF B	
C179	1-107-826-91	CAP, CHIP CERAMIC 100000PF B	
C180	1-107-826-91	CAP, CHIP CERAMIC 100000PF B	
C181	1-107-826-91	CAP, CHIP CERAMIC 100000PF B	
C183	1-107-826-91	CAP, CHIP CERAMIC 100000PF B	
C184	1-164-677-91	CAP, CHIP CERAMIC 33000PF B	(1608)
C185	1-107-826-91	CAP, CHIP CERAMIC 100000PF B	
C186	1-164-392-91	CAP, CHIP CERAMIC 390PF CH	(1608)
C187	1-115-467-91	CAP, CHIP CERAMIC0.22MF B	(1608)
C188	1-164-677-91	CAP, CHIP CERAMIC 33000PF B	(1608)
C189	1-164-739-91	CAP, CHIP CERAMIC 560PF CH	(1608)
C190	1-164-739-91	CAP, CHIP CERAMIC 560PF CH	(1608)
C196	1-162-964-91	CAP, CHIP CERAMIC 1000PF B	(1608)
C197	1-115-467-91	CAP, CHIP CERAMIC0.22MF B	(1608)
C198	1-125-837-91	CAP, CHIP CERAMIC 1MF B	(1608)
C199	1-125-837-91	CAP, CHIP CERAMIC 1MF B	(1608)
		<CONNECTOR>	
CN100	1-794-237-21	CONNECTOR, FFC/FPC 30P	
CN101	1-770-619-41	PIN, CONNECTOR 2P	
CN102	1-770-619-21	PIN, CONNECTOR 2P	
CN103	1-770-619-81	PIN, CONNECTOR 2P	
CN104	1-815-089-21	CONNECTOR, FPC LIF(NON-ZIF)13P	
CN105	1-779-206-21	CONNECTOR, FFC(LIF(NON-ZIF))4P	
CN106	1-785-343-21	CONNECTOR, FFC/FPC (ZIF) 30P	
CN107	1-779-206-21	CONNECTOR, FFC(LIF(NON-ZIF))4P	
CN108	1-794-437-21	PIN, CONNECTOR 7P	
CN109	1-815-231-21	CONNECTOR, FFC/FPC (ZIF) 40P	
		<DIODE>	
D100	8-719-065-68	DIODE MAZF04700LS0	
D101	8-719-065-68	DIODE MAZF04700LS0	
		<FERRITE BEAD>	
FB001	1-469-562-21	FERRITE, EMI (SMD)	
FB002	1-469-562-21	FERRITE, EMI (SMD)	
FB003	1-469-667-21	FERRITE, EMI (SMD)	
FB004	1-469-667-21	FERRITE, EMI (SMD)	
FB005	1-469-667-21	FERRITE, EMI (SMD)	
FB006	1-469-667-21	FERRITE, EMI (SMD)	
FB007	1-469-667-21	FERRITE, EMI (SMD)	
FB008	1-469-667-21	FERRITE, EMI (SMD)	

Ref.	Part No.	Description	
		<IC>	
IC101	8-759-685-15	IC SP3727ACA0PMR	
IC102	8-759-490-71	IC BA5912AFP-YE2	
		<INDUCTOR>	
L100	1-469-524-91	INDUCTOR 4.7UH (NLFV25)	
L101	1-469-524-91	INDUCTOR 4.7UH (NLFV25)	
L102	1-414-394-41	INDUCTOR (SMD) 2.2UH	
		<COIL>	
LF001	1-416-405-21	FILTER, CHIP EMI (COMMON MODE)	
		<TRANSISTOR>	
Q100	8-729-031-35	TRANSISTOR 2SK2034-TE85L	
Q101	8-729-103-96	TRANSISTOR 2SB798-T1DL	
Q102	8-729-029-13	TRANSISTOR DTC143ZUA-T106	
Q103	8-729-031-35	TRANSISTOR 2SK2034-TE85L	
Q104	8-729-103-96	TRANSISTOR 2SB798-T1DL	
Q105	8-729-048-50	TRANSISTOR 2SK3018-T106	
Q107	8-729-048-50	TRANSISTOR 2SK3018-T106	
Q111	8-729-048-50	TRANSISTOR 2SK3018-T106	
Q112	8-729-905-38	TRANSISTOR 2SC4081T106R	
Q113	8-729-905-38	TRANSISTOR 2SC4081T106R	
		<RESISTOR>	
R104	1-216-158-91	RES, CHIP 22	(3216)
R105	1-216-158-91	RES, CHIP 22	(3216)
R106	1-216-809-91	RES, CHIP 100	(1608)
R107	1-216-833-91	RES, CHIP 10K	(1608)
R108	1-216-797-91	RES, CHIP 10	(1608)
R109	1-216-809-91	RES, CHIP 100	(1608)
R110	1-216-833-91	RES, CHIP 10K	(1608)
R112	1-216-158-91	RES, CHIP 22	(3216)
R113	1-216-158-91	RES, CHIP 22	(3216)
R114	1-216-797-91	RES, CHIP 10	(1608)
R115	1-218-871-91	RES, CHIP 10K	(1608)
R116	1-218-871-91	RES, CHIP 10K	(1608)
R117	1-218-881-91	RES, CHIP 27K	(1608)
R118	1-218-881-91	RES, CHIP 27K	(1608)
R119	1-218-881-91	RES, CHIP 27K	(1608)
R121	1-218-890-91	RES, CHIP 62K	(1608)
R125	1-218-881-91	RES, CHIP 27K	(1608)
R126	1-218-889-91	RES, CHIP 56K	(1608)
R130	1-218-873-91	RES, CHIP 12K	(1608)
R131	1-216-864-91	CONDUCTOR, CHIP	(1608)
R132	1-216-864-91	CONDUCTOR, CHIP	(1608)
R133	1-216-864-91	CONDUCTOR, CHIP	(1608)
R134	1-216-864-91	CONDUCTOR, CHIP	(1608)
R145	1-216-864-91	CONDUCTOR, CHIP	(1608)
R146	1-216-864-91	CONDUCTOR, CHIP	(1608)
R147	1-216-864-91	CONDUCTOR, CHIP	(1608)
R148	1-216-864-91	CONDUCTOR, CHIP	(1608)
R150	1-216-864-91	CONDUCTOR, CHIP	(1608)
R151	1-216-802-91	RES, CHIP 27	(1608)
R152	1-216-816-91	RES, CHIP 390	(1608)
R153	1-216-810-91	RES, CHIP 120	(1608)
R155	1-216-864-91	CONDUCTOR, CHIP	(1608)
R157	1-216-841-91	RES, CHIP 47K	(1608)
R158	1-216-841-91	RES, CHIP 47K	(1608)
R159	1-216-841-91	RES, CHIP 47K	(1608)
R160	1-216-841-91	RES, CHIP 47K	(1608)
R161	1-216-841-91	RES, CHIP 47K	(1608)
R162	1-216-841-91	RES, CHIP 47K	(1608)
R163	1-216-841-91	RES, CHIP 47K	(1608)
R164	1-216-841-91	RES, CHIP 47K	(1608)

Ref.	Part No.	Description	
R166	1-216-833-91	RES, CHIP 10K	(1608)
RB100	1-233-415-21	RES, CHIP NETWORK 10K (3216)	

****

53 A-6712-759-A MOUNTED CIRCUIT BOARD, SW-350
****
PLACE CODE #25SW

		<CONNECTOR>	
CN851	1-794-437-21	PIN, CONNECTOR 7P	
		<DIODE>	
D851	8-719-078-90	DIODE CL-165HR/G1-D-T	
D852	8-719-080-04	DIODE CL-190UB-X-T	
		<RESISTOR>	
R851	1-216-833-91	RES, CHIP 10K (1608)	
R852	1-216-835-91	RES, CHIP 15K (1608)	
R853	1-216-993-91	RES, CHIP 2.4K (1608)	
		<SWITCH>	
S851	1-771-917-21	SWITCH, TACTILE	
S852	1-771-917-21	SWITCH, TACTILE	

****

Ref.	Part No.	Description	
	SUPPLIED ACCESSORIES	PLACE CODE #23	
	**********		
	A-6785-053-A	ACCESSORY & PACKING GROUP	#23
⚠	1-790-108-21	CORD, POWER	#23
AV	1-792-028-□□	CORD, CONNECTION	#23
CONT	1-792-238-□□	CORD, CONNECTION	#23
CU2	3-064-713-□□	CUSHION 2	#23
CU	3-064-714-□□	CUSHION	#23
MCA	3-065-169-□□	MASTER CARTON, 3 SETS	#23
PSH	3-065-170-□□	SHEET, PROTECTION	#23
CA	3-065-171-□□	INDIVIDUAL CARTON	#23
TBP	3-987-483-□□	TAPE, BERODDED PREVENTION	#23
MB	A-6705-090-A	MANUAL BLOCK ASSY, INSTRUCTION	#23
S/N-CARD	3-051-394-01	CARD, SERVICE NUMBER	#23
FSRB	3-060-161-02	SHEET, ESRB	#23
MANUAL	3-064-922-□□	MANUAL, INSTRUCTION	#23
C/I CARD	3-066-021-01	CARD, CUSTOMER INQUIRY	#23

****

Reproduction Prohibited

TABLE OF CONTENTS

SCPH-30001 (B, B')

SCPH-30001 (C)

1. **Table of Contents and Specifications 1**

2. **Exploded Views**
   - Overall and Main Block 2
   - MD Block 3
   - Frame (Upper) Block 4
   - Switch Block 4
   - Shield (A) Assembly Block 5

3. **Block Diagram 6**

4. **Printed Wiring Boards and Schematic Diagrams**
   - This Note is Common for Printed Wiring boards and Schematic diagrams 7
   - GH-006 8
   - GD-013 18
   - GM-043 20
   - GI-006 24
   - SW-355 26
   - IC Block Diagrams 27

5. **Electrical Parts List 31**

SCPH-30002/30003/30004 (C, C')

SECTION 1
SPECIFICATIONS

General
Power requirements
120 V AC, 60 Hz
Power consumption
79 W
Dimensions
301 × 78 × 182 mm (w/h/d)
Mass
2.4 kg

Inputs/ Outputs on the front
Controller ports (2)
Memory card slots (2)
USB ports (2)
S400 (i-Link) port (1)

Inputs/Outputs on the rear
HDD bay slot (1)

Outputs on the rear
AV Multi out port (1)
RGB, Ycbcr, Y/C, Composite-video, Audio-L/R, XGA
Digital out port (1)
Optical audio

Supplied accessories
AC power cord (1)
A/V connecting cable (1)
Dualshock2 Analog controller (1)

Reproduction Prohibited

SECTION 2
EXPLODED VIEWS

Overall and Main Block

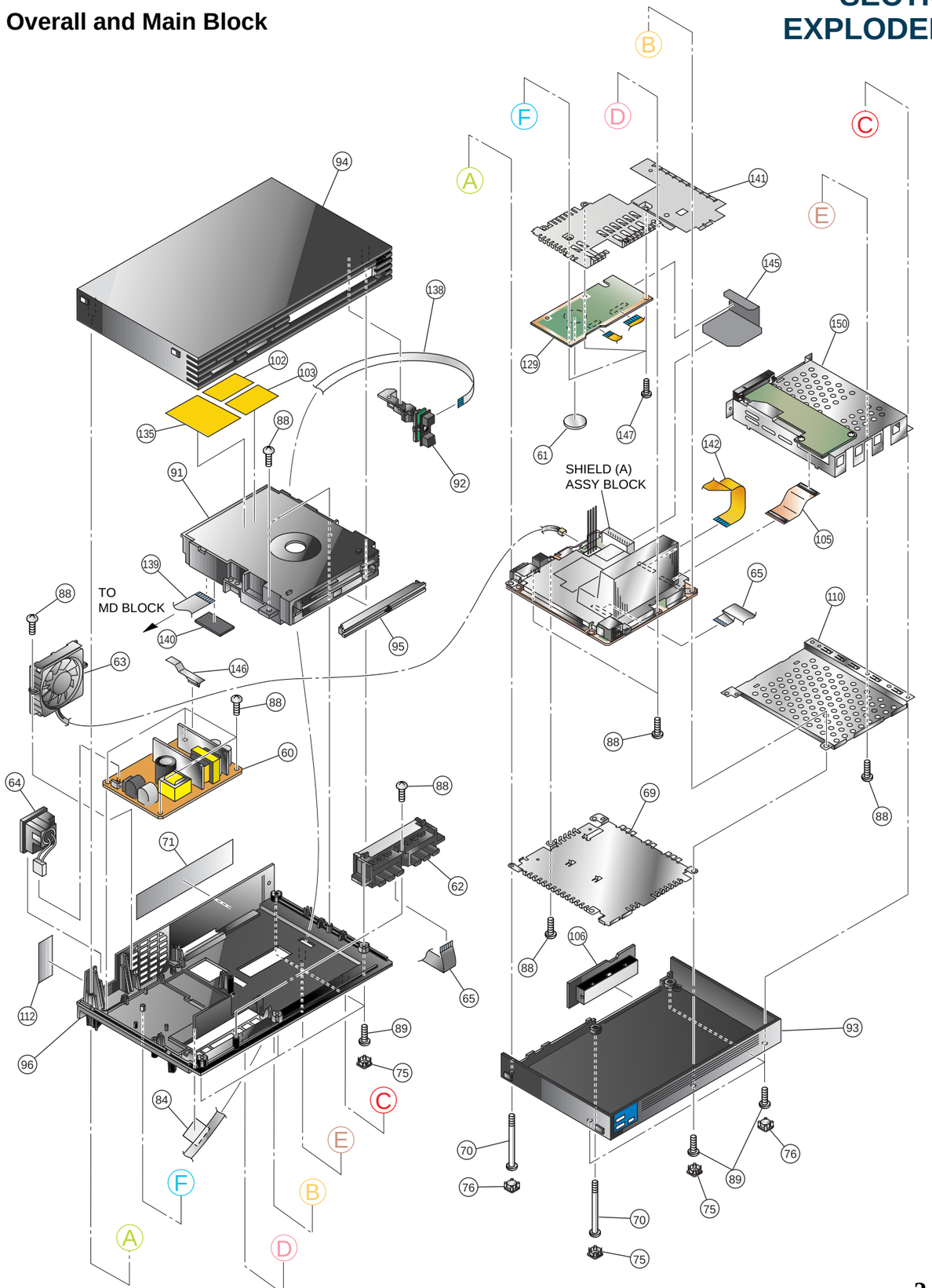

CAUTION

The components identified by mark ⚠ or dotted line with mark. ⚠ are critical for safety. Replace only with part number specified.

CAUTION :
Use of controls or adjustments or performance of procedures other than those specified herein may result in hazardous radiation exposure.

OVERALL AND MAIN BLOCK

	Ref-No.	Part No.	Description	Remark	Place code
⚠	60	1-468-563-11	POWER BLOCK	for SCPH-30001	#00
⚠	60	1-468-565-21	POWER BLOCK	for SCPH-30002, 30003, 30004	#00
⚠	61	1-528-174-41	BATTERY, LITHIUM (CR2032 TYPE)		#25GD
	62	1-694-767-11	TERMINAL BOARD (FRONT)		#17
	63	1-763-480-11	DC. FAN		#74
⚠	64	1-771-994-11	SWITCH, POWER (WITH AC INLET)	for SCPH-30001	#00
⚠	64	1-771-995-12	SWITCH, POWER (WITH AC INLET)	for SCPH-30002, 30003, 30004	#00
	65	1-792-491-21	CABLE, FLEXIBLE FLAT (FFC-290)		#12
	69	3-066-489-01	SHIELD (B)		#16
	70	3-059-622-02	SCREW (M3X54), HEAD TAPPING		#87
	71	3-066-442-02	LABEL, MODEL NUMBER	for SCPH-30003	#87
	71	3-066-445-02	LABEL, MODEL NUMBER	for SCPH-30002	#87
	71	3-066-490-02	LABEL, MODEL NUMBER	for SCPH-30004	#87
	71	3-066-508-01	LABEL, MODEL NUMBER	for SCPH-30001	#87
	75	3-059-626-03	COVER, SCREW		#22
	76	3-059-627-01	CAP		#22
	84	3-060-398-02	TAPE, HARNESS STOPPER	for SCPH-30001	#88
	84	3-067-170-01	TAPE, HARNESS STOPPER	for SCPH-30002, 30003, 30004	#88
	88	3-325-679-21	SCREW, TAPPING +BV 3X12		#87
	89	3-325-679-91	SCREW (2 LOCK), +BV TAPPING		#87
	91	A-6705-243-A	MD BLOCK ASSY	for SCPH-30001	#10
	91	A-6705-247-A	MD BLOCK ASSY	for SCPH-30002, 30003, 30004	#10
	92	A-6705-235-A	SWITCH BLOCK ASSY		#25SW
	93	X-3951-392-1	COVER ASSY, LOWER	for SCPH-30001	#87
	93	X-3951-398-1	COVER ASSY, LOWER	for SCPH-30002, 30003, 30004	#87
	94	X-3951-391-1	COVER ASSY, UPPER	for SCPH-30001	#87
	94	X-3951-498-1	COVER ASSY, UPPER	for SCPH-30002, 30003, 30004	#87
	95	X-3951-099-1	PLATE ASSY, ORNAMENTAL		#87
	96	X-3951-393-1	CHASSIS ASSY	for SCPH-30001	#87
	96	X-3951-395-1	CHASSIS ASSY	for SCPH-30002, 30003, 30004	#87
⚠	102	3-969-533-11	LABEL, CAUTION SERIAL (NO.)	for SCPH-30001	#88
⚠	103	3-976-231-11	LABEL, CAUTION	for SCPH-30001	#88
	105	1-680-147-11	PWB, FP-324 FLEXIBLE		#12
	106	X-3951-316-1	LID ASSY	for SCPH-30001	#87
	106	X-3951-317-1	LID ASSY	for SCPH-30002, 30003, 30004	#87
	110	3-066-501-01	FRAME (LOWER)		#16
	112	3-066-253-01	TAPE, VOID	for SCPH-30001	#87
	112	3-066-498-01	TAPE, VOID	for SCPH-30002, 30003, 30004	#87
	129	A-6712-832-A	GD-013-11 MOUNT		#25GD
	129	A-6712-863-A	GD-013-21 MOUNT		#25GD
⚠	135	3-988-711-02	LABEL, LASER CAUTION	for SCPH-30002, 30003, 30004	#10
	138	1-757-588-11	CABLE, FLAT (FFC-308)		#12
	139	1-757-590-11	CABLE, FLAT (FFC-310)		#12
	140	3-066-545-01	SHEET (R), ELECTRIC HEAT		#16
	141	X-3951-396-1	SHIELD (C) ASSY		#87
	142	1-757-589-11	CABLE, FLAT (FFC-309)		#25GD
	145	3-066-594-01	SHEET (H), INSULATING		#25GH
	146	3-066-609-01	CLIP, SHIELD		#00
	147	3-066-488-01	SCREW (M3X9), +BV TAPPING		#25GD
	150	A-6705-236-A	FRAME (UPPER) BLOCK ASSY		#87

Reproduction Prohibited

MD Block

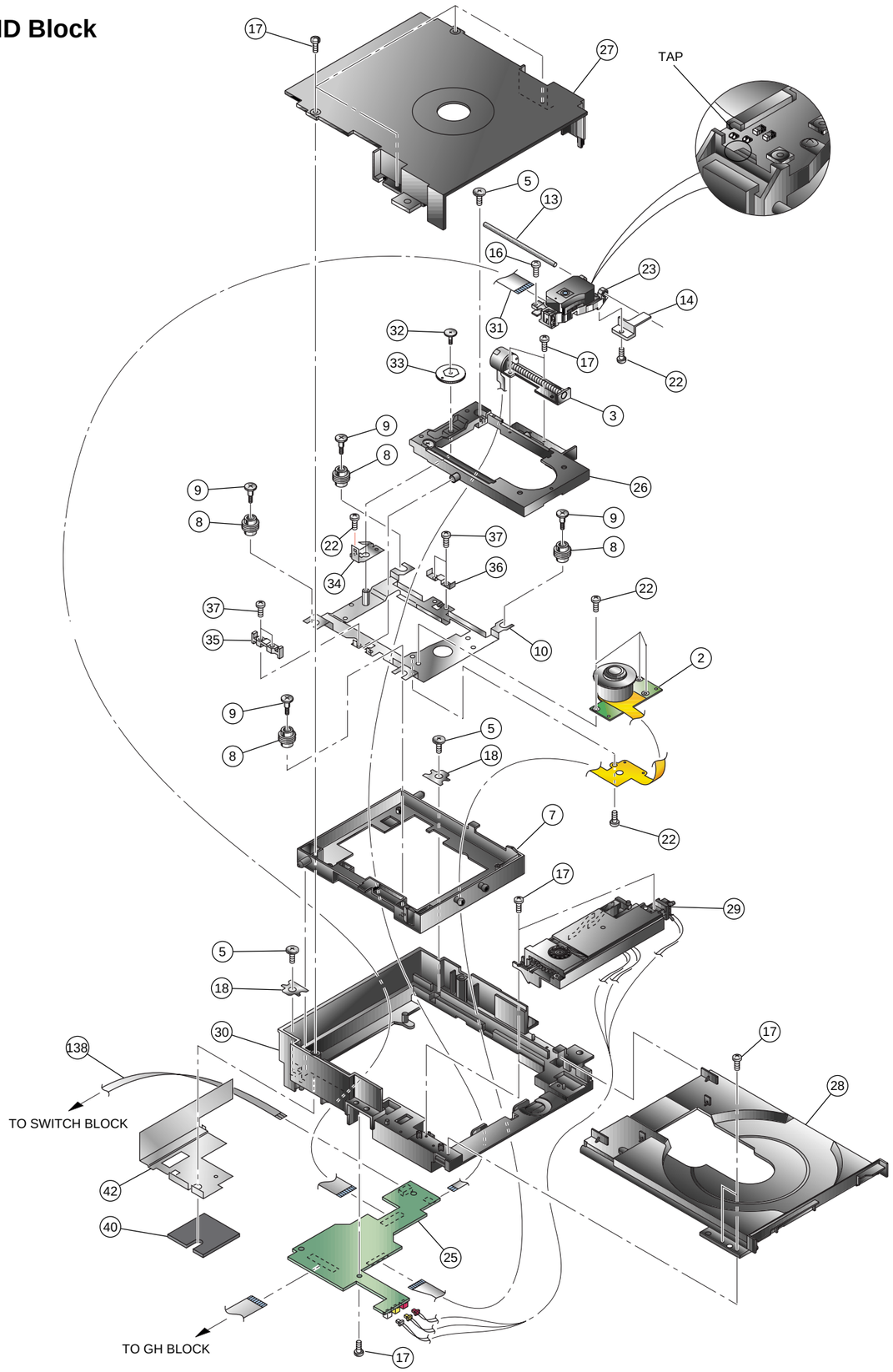

MD BLOCK

	Ref-No.	Part No.	Description	Remark	Place code
	2	1-763-611-11	MOTOR, DC (SPINDLE)		#10SP
	3	1-763-639-11	MOTOR, DC		#10
	5	3-059-845-01	SCREW (B2X6.5), SHAFT RETAINER		#10
	7	3-065-275-02	FRAME, SUB		#10
	8	3-065-277-01	INSULATOR		#10
	9	3-065-276-01	SCREW, STEP		#10
	10	X-3951-151-1	CHASSIS ASSY, MAIN		#10
	13	3-059-854-01	SHAFT, MAIN		#10
	14	3-059-855-02	RACK		#10
	16	3-060-399-01	SCREW, SKEW		#10
	17	3-060-400-01	TAPPING (B2X6.5)		#10
	18	3-065-281-01	SHEET, SHAFT RETAINER		#10
	22	3-062-728-01	0 PLATE 3 MAIN M2X3.2		#10
⚠	23	8-820-141-01	DEVICE, OPICAL KHS-400B		#10OP
	25	A-6712-833-A	GM043MOUNT		#10GM
	26	X-3951-152-2	CHASSIS ASSY, SUB		#10
	27	X-3951-154-2	BRACKET ASSY, PULLEY		#10
	28	X-3951-153-2	TRAY ASSY		#10TR
	29	X-3951-156-3	BOX ASSY, GEAR		#10GB
	30	3-065-271-03	FRAME, MAIN		#10
	31	1-680-370-11	PWB, FLEXIBLE		#10
	32	3-065-279-02	SCREW, CAM RETAINER		#10
	33	3-065-278-02	CAM, TILT		#10
	34	3-067-169-01	SPRING (TILT), PLATE		#10
	35	3-065-282-01	GUIDE (L)		#10
	36	3-065-283-01	GUIDE (R)		#10
	37	3-065-557-01	SCREW (M2X6.0)		#10
	38	3-065-274-01	CAM, SLIDE		#10GB
	39	3-065-505-0	BELT, RUBBER		#10GB
	40	3-067-186-01	SHEET (V), ELECTRIC HEAT		#10
	42	X-3951-501-1	HEAT SINK ASSY, MD		#10
	138	1-757-588-11	CABLE, FLAT (FFC-308)		#12

CAUTION

There are 2 taps behind Optical device for prevent the damage from static electricity.
these are usually shorted by solder when it shipping factory.
When You use the Optical device for repair, You have to open the 2 taps by melting solder.

In s case of the slide-cam (Ref.38) or the rubber belt (Ref.39) in the gear box assy broken, The slide-cam or The rubber belt should be exchanged itself, not Gear box assy.
When you exchange the feed DC-motor or Sub-chassis assy for repair, You have to grease Floil (SG474BY or a similar articles) up to Feed motor sledding gear and Sub-shaft.

Reproduction Prohibited

Frame (Upper) Block

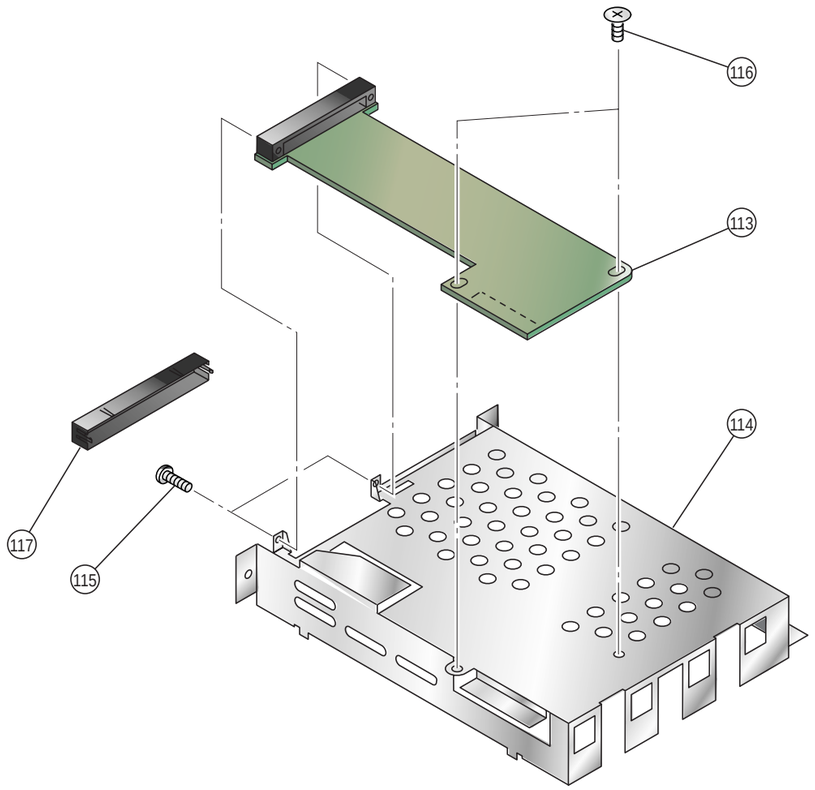

FRAME (UPPER) BLOCK

Ref-No.	Part No.	Description	Remark	Place code
113	A-6712-834-A	GI-006 MOUNT		#25GI
114	X-3951-399-1	FRAME (UPPER) ASSY		#87
115	3-065-998-01	SCREW (M2X9), UNIT		#87
116	3-065-999-01	SCREW B (M2X1.6), UNIT		#87
117	3-066-273-01	COVER, CONNECTOR		#25GI

Switch Block

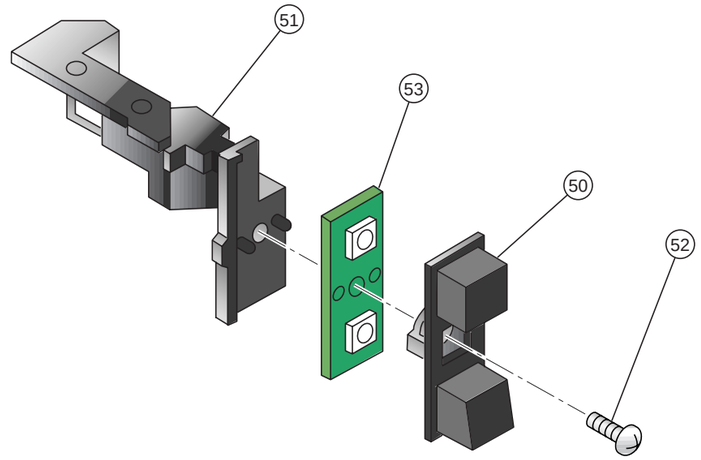

SWITCH BLOCK

Ref-No.	Part No.	Description	Remark	Place code
50	3-059-665-03	BUTTON, SWITCH		#25SW
51	3-059-666-05	BRACKET, SWITCH		#25SW
52	7-685-105-11	TPG +P 2X8, TYPE 2, NON-SLIT		#25SW
53	A-6712-830-A	SW-355 MOUNT		#25SW

Reproduction Prohibited

Shield (A) Assembly Block

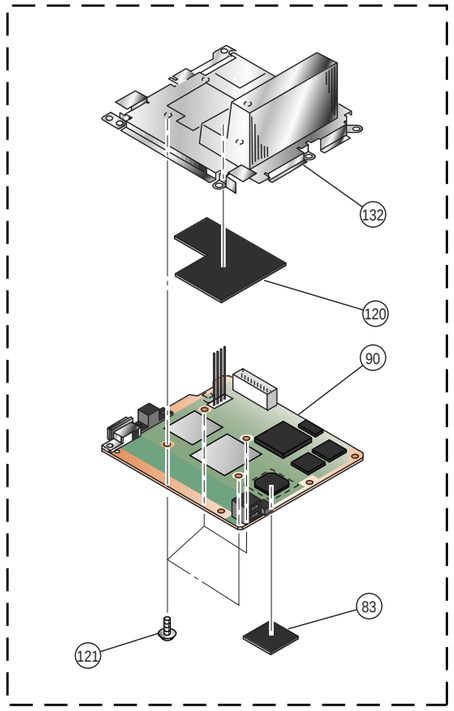

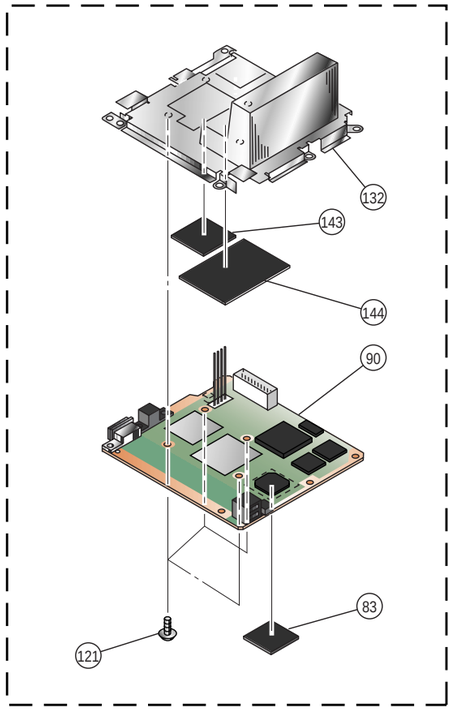

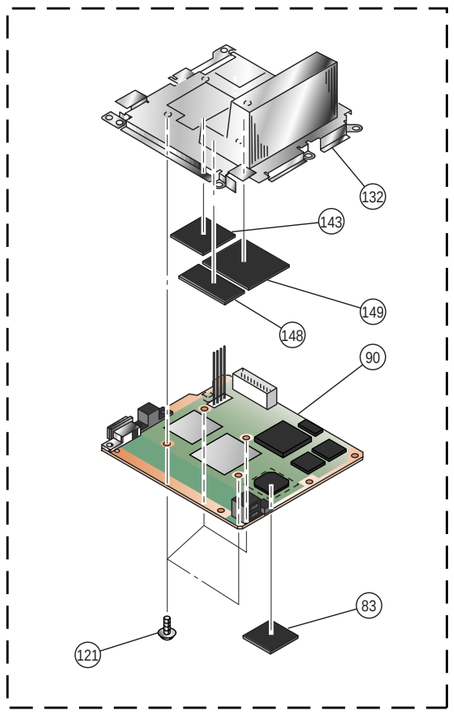

SHIELD (A) ASSEMBLY BLOCK

Ref-No.	Part No.	Description	Remark	Place code
83	3-060-388-01	SHEET, FERRITE		#87
90	A-6712-838-A	GH-006 MOUNT		#25GH
90	A-6712-856-A	GH-006 MOUNT		#25GH
90	A-6712-831-A	GH-006-11 MOUNT		#25GH
90	A-6712-835-A	GH-006-21 MOUNT		#25GH
90	A-6712-836-A	GH-006-11 MOUNT		#25GH
90	A-6712-837-A	GH-006-21 MOUNT		#25GH
90	A-6712-857-A	GH-007-11 MOUNT		#25GH
90	A-6712-858-A	GH-007-21 MOUNT		#25GH
90	A-6712-860-A	GH-007-11 MOUNT		#25GH
90	A-6712-861-A	GH-007-21 MOUNT		#25GH
120	3-059-652-01	SHEET (A), ELECTRIC HEAT		#87
121	3-061-369-01	SCREW (M2X6), PAN		#25GI
132	X-3951-394-1	SHIELD (A) ASSY		#87
143	3-066-277-01	SHEET (P), ELECTRIC HEAT		#25GH
144	3-066-278-01	SHEET (Q), ELECTRIC HEAT		#25GH
148	3-066-278-02	SHEET (Q), ELECTRIC HEAT		#87
149	3-066-678-01	SHEET (R), ELECTRIC HEAT		#87

Reproduction Prohibited

SECTION 3
BLOCK DIAGRAM

IC Ref No. : A side
IC Ref No. : B side

CN002
CN001, CN302
FRONT TERMINAL
CONTROLLER 1 DATA
MEMORY CARD 1 DATA (Magic Gate)
CONTROLLER 2 DATA
MEMORY CARD 2 DATA (Magic Gate)

IOP
IC303
IOP
IC305
EDO RAM
WE
MD0-31
MA0-9
CAS0-3
AD0-31
/BE0-3
/RDAC
/WRAC
/RDY
/BREQ
/BGNT
DREQ0
DREQ1
DACK
/SGINT
/SINT
/SRST
MSCLK
PGCLK

EE+RDRAM
IC104
EMOTION ENGINE
SIF
CPU
GIF
TIMER
DMAC
VU0
VU1
SIO
IPU
INTC
128bit BUS
DRAMC
IC102
IC103
RDRAM (16MB)
RQ_A0-7/RQ_B0-7
DQA_A0-7/DQA_B0-7
DQB_A0-7/DQB_B0-7
CTMN
CTM
IC101
CLOCK GENERATOR
X101 18.432MHz

GD0-63
GA0-6
CLKCG
CLKGC
/VLDCG
/VLDGC
/RDYCG
/RDYGC
GRW
/GACK
/GREQ
/GINT

GS+VIDEO
IC202
GRAPHICS SYNTHESIZER
ARED
AGEN
ABLU
SPCLK
X202 54MHz
IC205
RO0-7
GO0-7
BO0-7
RGB to YCrCB MATRIX
Mod
DAC
SYNC_GEN,HD0,1
CONTROL REGISTER
M-Bus Control Module
DIGITAL VIDEO ENCODER
C
Y
COMPONENT
DIGITAL DATA
MODE0-2
IC206
ANALOG VIDEO ENCODER
D0-2
RIN1
GIN1
BIN1
R
G
B
HSYNC, VSYNC, CSSYNC, PAL/NTSC, CLOCK, RGBYC
COUT
YOUT
CVBS-OUT
BOUT/CbOUT/PbOUT
GOUT/YOUT
ROUT/CbOUT/PbOUT
AUL
AUR
CN201
AV MULTI OUT

IC306
REF.V GEN.
+2.5V
VREF
X302 16.9344MHz
X301 24.576MHz
PLL
400MHz
PHY
USB PORTX2
i LINK
CN303
FL301, 302
(DATA+,DATA−)X2
CN301
TPA/TPAn/TPB/TPBn

IC501
HDD CONTROLLER
SCL
SDA
/DVRST
RT
CN504
HDD DATA (CD0-15)
HDD ADDRESS (CA0-25)
CONTROL
to HDD

IC503, 506 : for GH-006/007-21
IC505 : for GH-006/007-11
SPU2+ HDD+ DVD+ AUDIO
BOOT ROM DVD ROM
SD0-15
SA0-21
/CS1,/CS2
SUB DATA BUS
SUB ADDRESS BUS
SYSTEM CONTROL BUS
SD0-15
SA0-26
SA0-15
SD0-15
SA0-15,24-26
SA1-10
SPUDI,SPUDATI
SPUBCKI,SPULRCKI
SPU(DI, DATI,BCKI, LRCKI)
/SSRST,/RST
SLEEP,POFF_REQ,OP_DISC
PWRUP_EE/ESTBY/ERST
GSTBY,LCLK,/GRST
SPUDATI/SPUBCKI/SPULRCKI
/POFF_RDY
SLEEP
PO_DISC
POFF_REQ

MD BLOCK
CD-ROM { PlayStation Format / PlayStation2 Format }
DVD VIDEO / DVD ROM / AUDIO CD { PlayStation2 Format }

IC105
LOW POWER THERMOSTAT
T1;70.6°C
T2;76.7°C
TS_SI
IC101
RF AMP
CN100-105
CN109
CN604
PD1
PD2
A-F
FE
TE
CE
RFD0
CONTROL BUS
IC700
SPINDLE CONTROL
DRIVER
IC701,703
FORCUS/TRACKING/ SLIDE/LOADING
H (±), H1 (±) H2 (±), H3 (±) A1, 2, 3
STD (±A, ±B) TD _OFST LOADING (±) TRK (±) FCS (±)
STEP(±A,±B) TRAY(CNT,DRVF,DRVR)
DECK CONTROL BUS
GM-043
RF-AMP+DRIVER

IC605
CD/DVD DSP
(FF,FR,TF,TR)DR
MCD0-7
MCA0-8
IC604
MECHA-CON
SP_GAINSW/ SP_PS/SPDL/ SP_SB/SP_BR
(FF,FR,TF,TR)DR
STEP(±A,±B) TRAY(CNT,DRVF,DRVR)
EVER3.5V
BT401
IC405
TIMER
X402 32.768MHz
IC406
EEP ROM
EEP-SI
EEP-SO
EEP-SCK
EEP-CE
PG5
PG6
PG7
PG4
PB2
µCON+DSP
GD-013

IC402
SYSTEM CONTROL
/POFF_RDY
SYS_SRST
TRAY_REQ
MCON_ACK
HDD_SW, SW1.5, SW1.9/SW2.5 SW5.1/SW3.3, SW12, FAN_PWM
X401 4MHz
GREEN_ON
RED_ON
Q405
PWR_SW,/GREEN_ON,OP/CL_SW,/RED_ON
TRAY_LED-ON
Q601
/BLUE_ON
DD+SYSTEM CONTROL

IC502
DRAM
SPMD0-15
SPMA0-9
WE
RAS
CAS
OE
IC504
SPU2
RST
DAD OUT
DABCK OUT
DALRCK OUT
DACK
SPMUTE
Q505
/RST
IC517
AUDIO D/A CONVERTER
AUL
AUR
MUTE
Q506
DIGITAL OUT
CN501
OPTICAL DIGTAL OUT
SPU2+AUDIO+HDD

SYSTEM POWER REGURATOR/FAN DRIVE/USB DRIVE/HDD DRIVE — CN407 — AC12V IN

GD-013		GH-006/007
DIG +3.5V/DIG +5V REG (USB DRIVE) IC409, Q406-408 (DC-DC CONVERTER)	IC403 : EVER 3.5V REG IC407 : DIG +1.8V REG Q415,416, IC411 : DIG +1.8V REG IC412 : DIG +2.5V REG IC413 : DIG +3.5V REG IC414 : DIG +8V REG Q409-411, 414 : HDD +5V/+12V REG	IC403,Q407 :+8.5V(FAN DRIVE) Q401,402,404,IC404 : DIG +1.5V REG IC408 : DIG +1.8V REG IC410 : DIG +2.5V REG

SYSTEM POWER SUPPLY

RF-AMP
CN108
POWER SW
OPEN/CLOSE SW
SW-350

Reproduction Prohibited

SECTION 4
PRINTED WIRING BOARDS AND SCHEMATIC DIAGRAMS

THIS NOTE IS COMMON FOR PRINTED WIRING BOARDS AND SCHEMATIC DIAGRAMS.

Note on Printed Wiring Boards :
- Through hole is omitted.
- ▭ : Pattern on the side which is seen.

Note on Schematic Diagram :
- Use caution when replacing chip parts.
  New parts must be attached after removal of chip.
  Be careful not to heat the minus side of tantalum capacitor, because it is damaged by the heat.
- All capacitors are in µF unless otherwise noted. pF : µµF 50 WV or less are not indicated except for electrolytics and tantalums.
- All resistors are in Ω and 1/4 W (Chip resisters : 1/10W) unless otherwise specified.
- Chip resistors are 1/8 W or 1/10 W unless otherwise noted.
  kΩ : 1000Ω, MΩ : 1000 kΩ.

Note : The components identified by mark ⚠ or dotted line with mark ⚠ are critical for safety. Replace only with part number specified.	**Note :** Les composants identifies par une marque ⚠ sont critiques pour la securite. Ne les remplacer que par une piece portant le nubero specifie.

Note on DC Power line :
- +12V :
- +8.0V :
- +5.0V :
- +3.5V :
- +3.4V :
- +3.3V :
- +2.5V :
- +1.8V :
- +1.7V :
- +1.5V :
- IN :
- OUT :
- Main Signal Line : ,

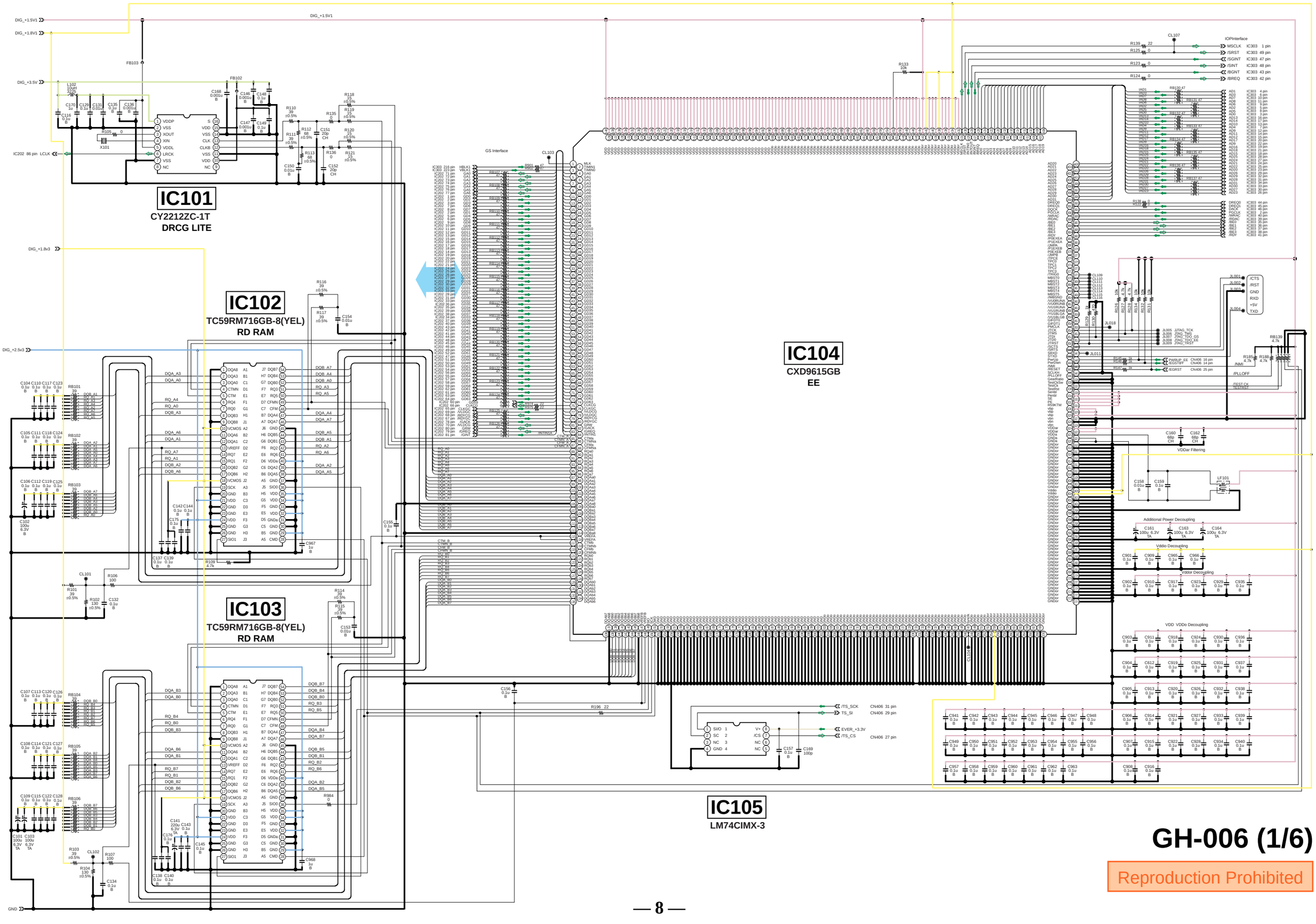

GH-006 (1/6)

Reproduction Prohibited

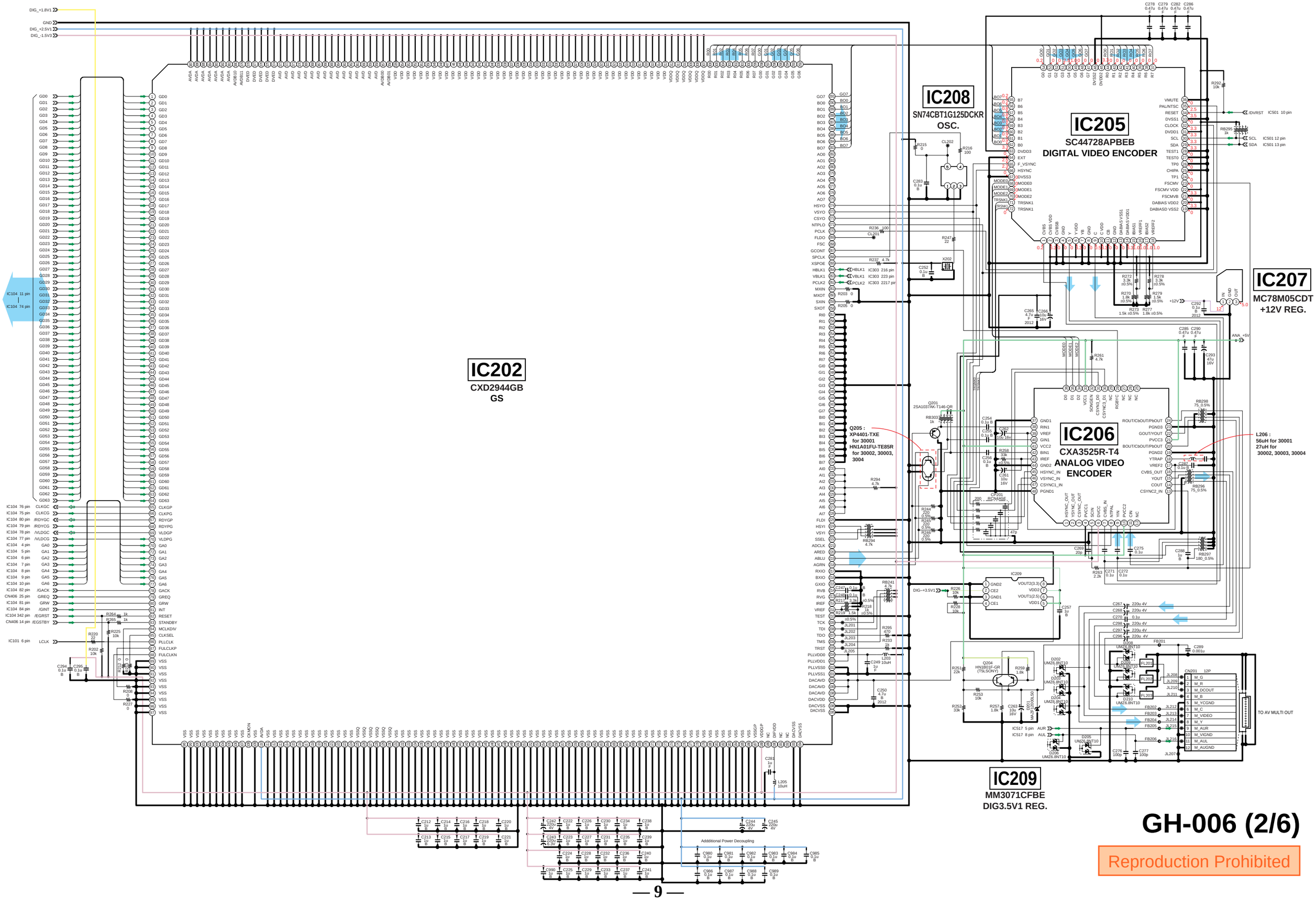

GH-006 (2/6)

Reproduction Prohibited

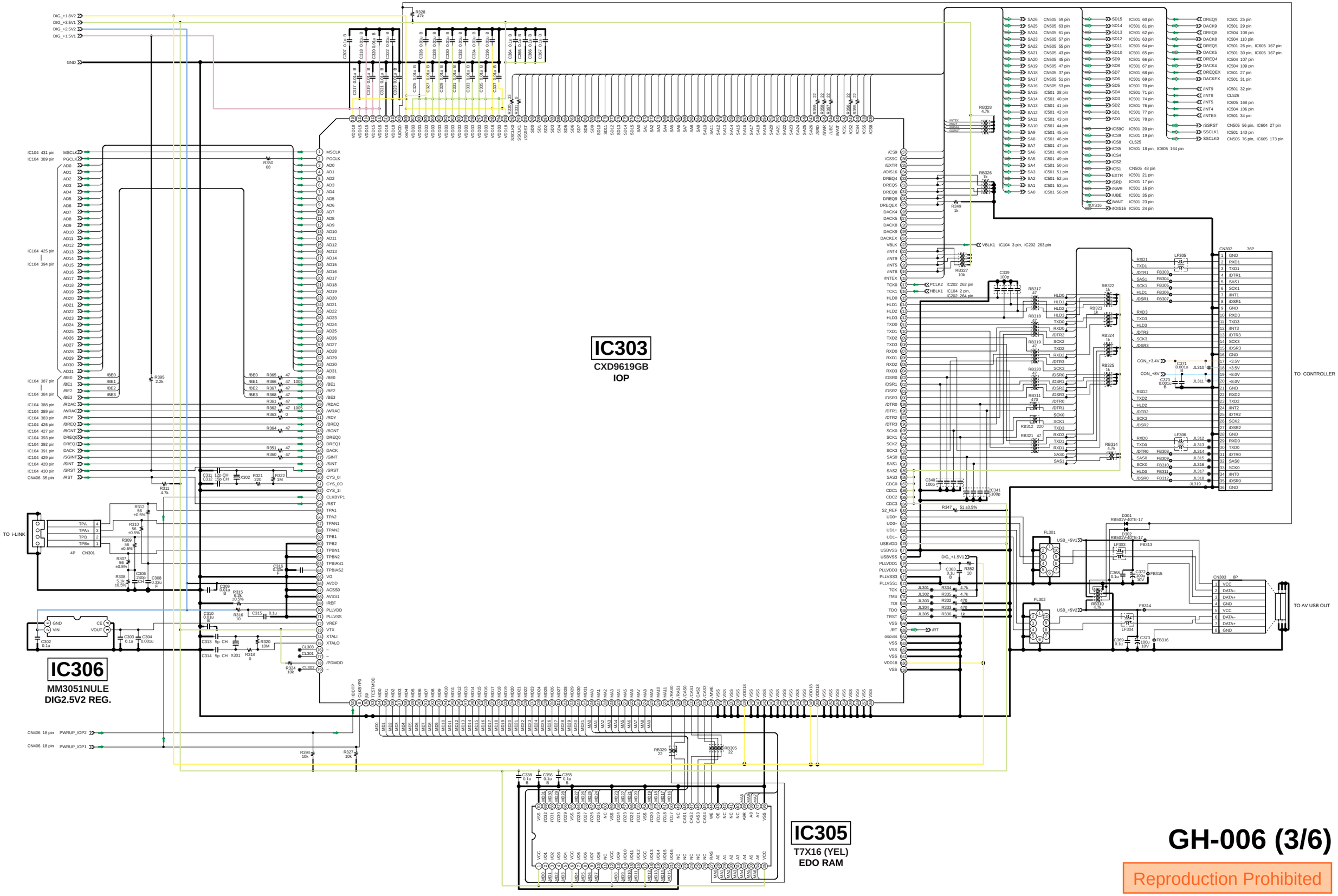

GH-006 (3/6)
Reproduction Prohibited

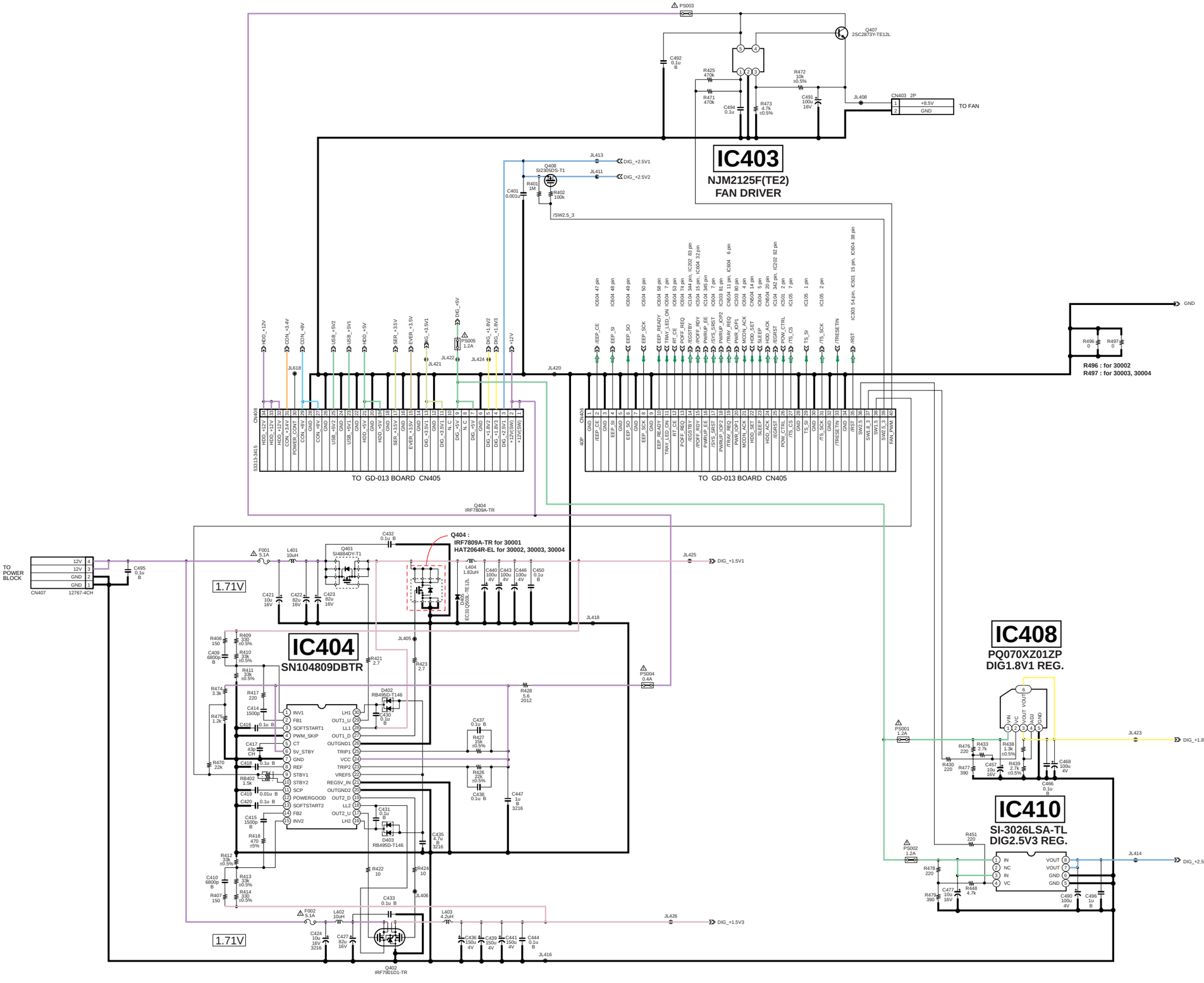

GH-006 (4/6)

Reproduction Prohibited

IC518 : for GH-006-11

IC518
TC7WB125FK 9TE85R)

C526, C543, R527 :
for GH-006-11 (30001) and
GH-006-21 (30002, 30003, 30004)

IC503
MR27V3202E-25TPZ020 : for GH-006-11 (30002, 30003, 30004)
MR27V1602E-23TPZ020 : for GH-006-11 (30001)

IC506 MR27V1602E-44TPZ020 : for GH-006-11 (30002)
MR27V1602E-45TPZ020 : for GH-006-11 (30003, 30004)
MR27V3202E-24TPZ020 : for GH-006-21 (30001)

IC503
MRBOOT ROM

IC506
MR2DVD ROM

IC502
SDMN18165CTM6S
DRAM

IC504
CXD2942AR
SPU2

IC505
TC5364200FT-UC120 : for GH-006-21 (30001)
TC5364200FT-AU120 : for GH-006-21 (30002)
TC5364200FT-AE120 : for GH-006-21 (30003, 30004)
DVD/BOOT ROM

C512, C505 :
for GH-006-11 (30002, 30003, 30004)
and GH-006-21 (30001)

IC501
CXD9611R
HDD CONTROLLER

IC517
CS4335-KS
AUDIO DUC

Reproduction Prohibited

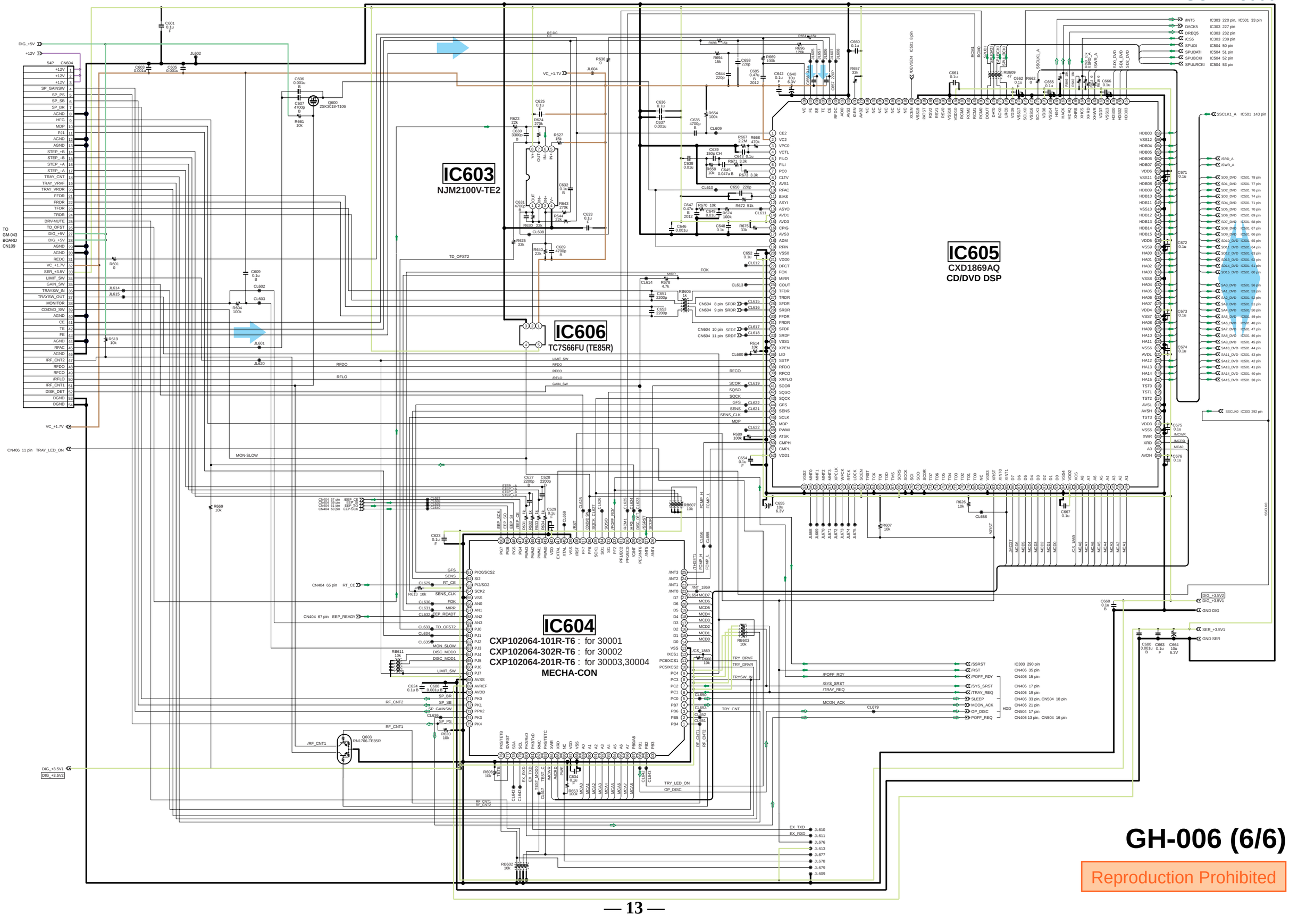

GH-006 (6/6)

Reproduction Prohibited

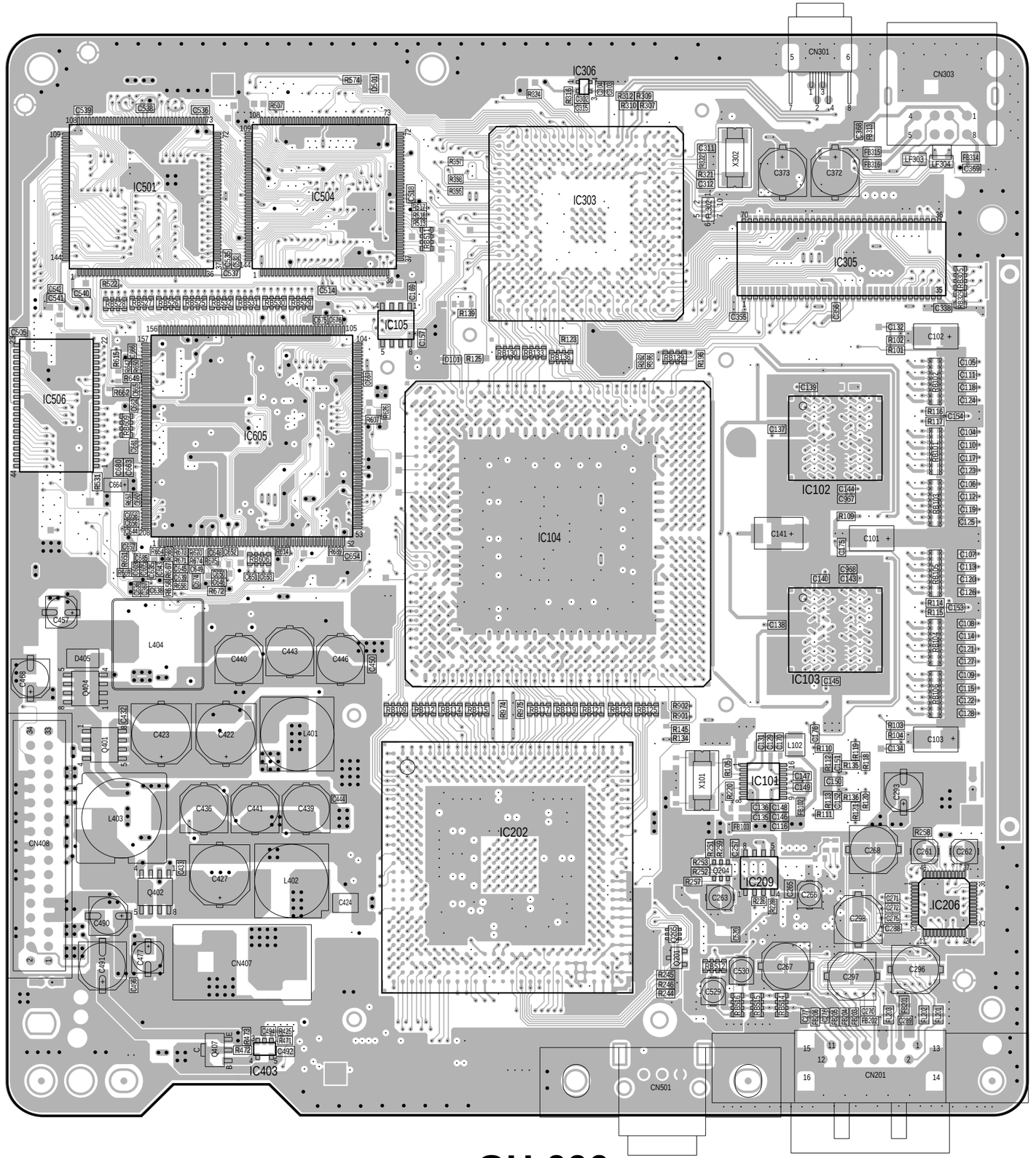
IC306
CN301
CN303
IC501
IC504
IC303
IC305
IC105
IC506
IC605
IC104
IC102
IC103
IC101
IC202
IC209
IC206
IC403
CN408
CN407
CN501
CN201
X302
X101
C373
C372
C102
C101
C103
L404
L401
L403
L402
D405
Q404
Q401
Q402
Q407
C457
C440
C443
C446
C423
C422
C436
C441
C439
C427
C424
C490
C491
C477
C538
C539
C536
C537
C514
C505
C654
C655
C656
C657
C658
C659
C660
C661
C662
C663
C664
C665
C666
C667
C668
C669
C670
C671
C672
C673
C674
C675
C676
C677
C678
C679
C680
C681
C682
C683
C684
C685
C686
C687
C688
C689
C690
C691
C692
C693

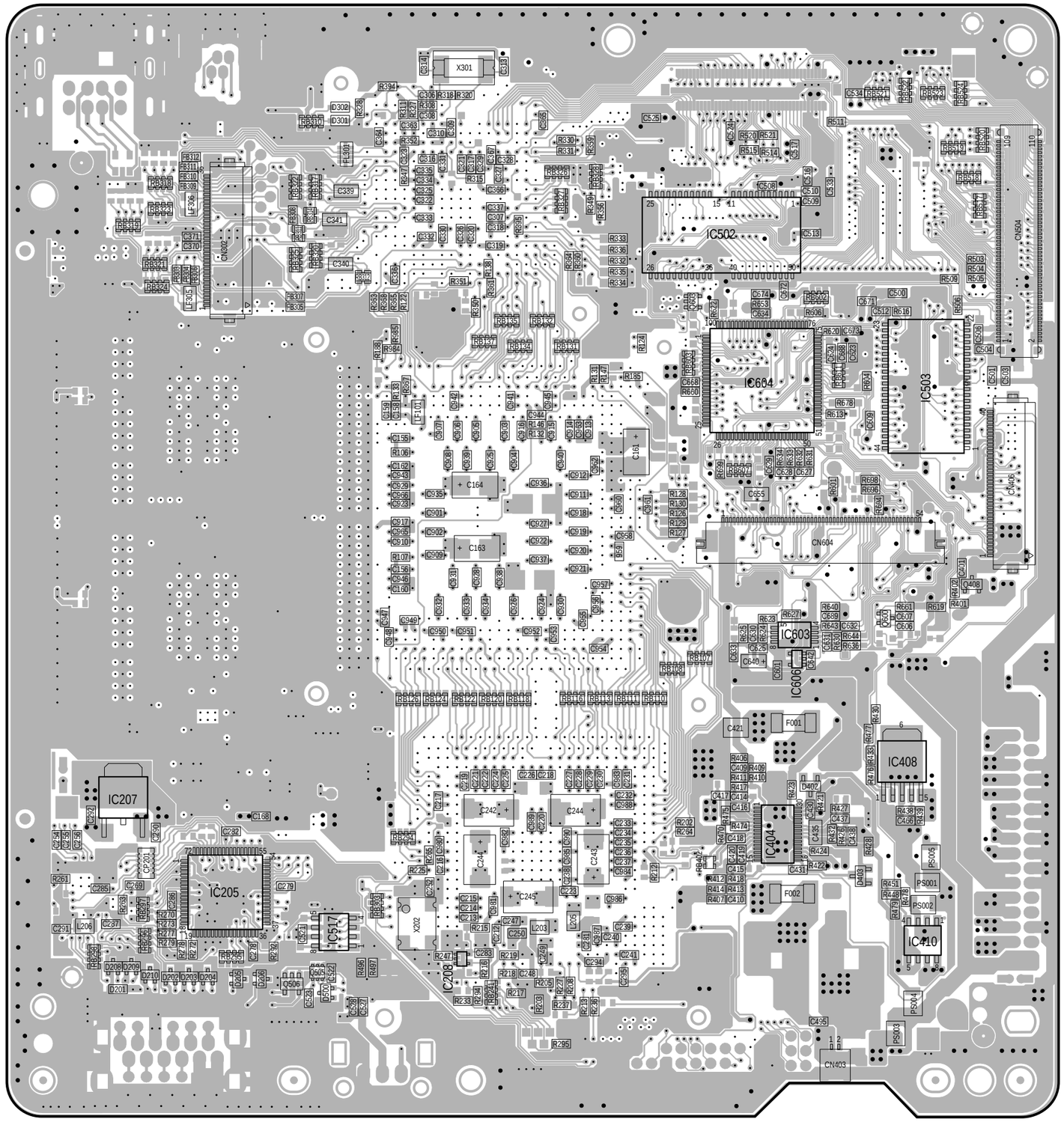

11

GH-006

B side

Reproduction Prohibited

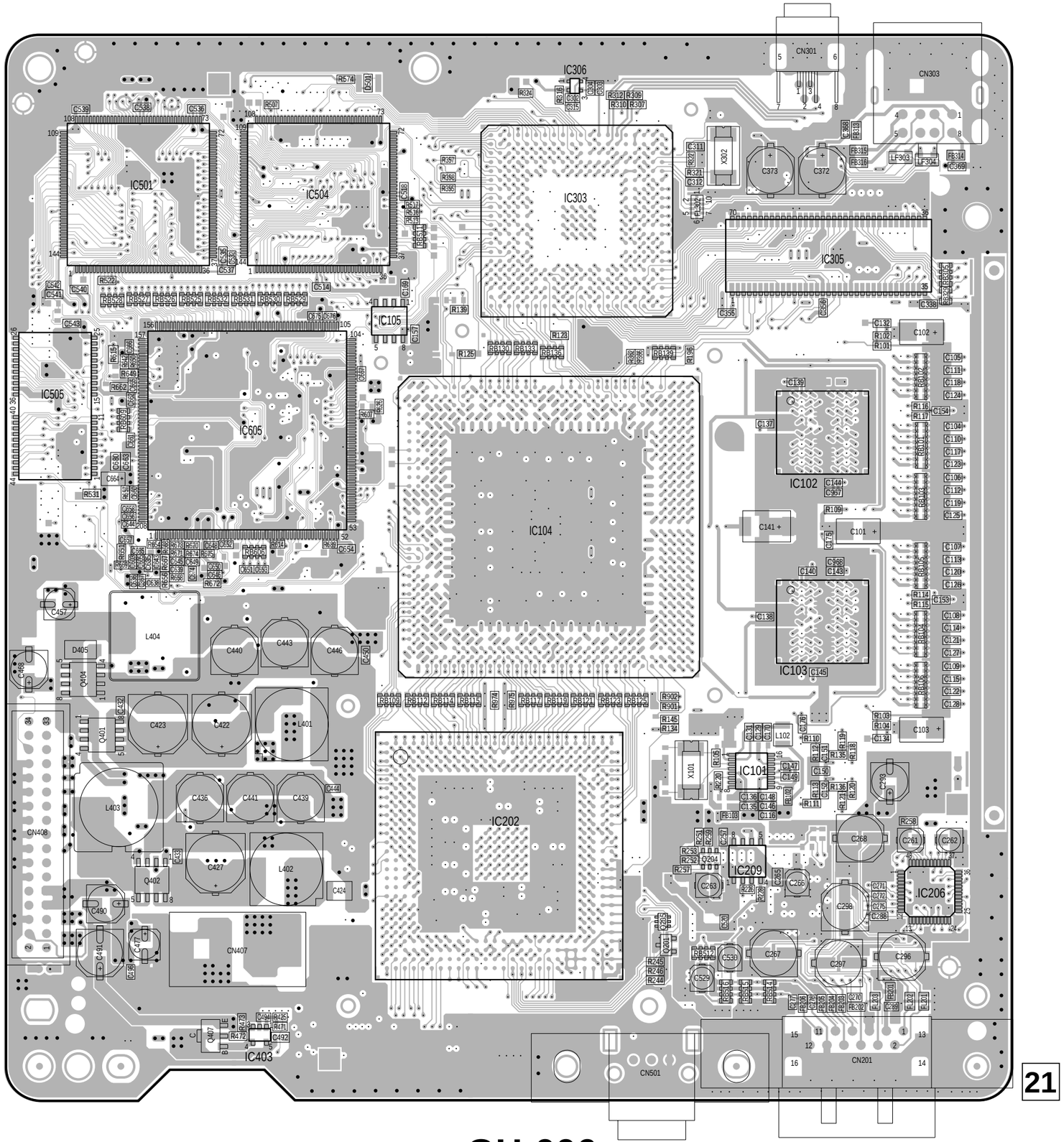

GH-006

A side

Reproduction Prohibited

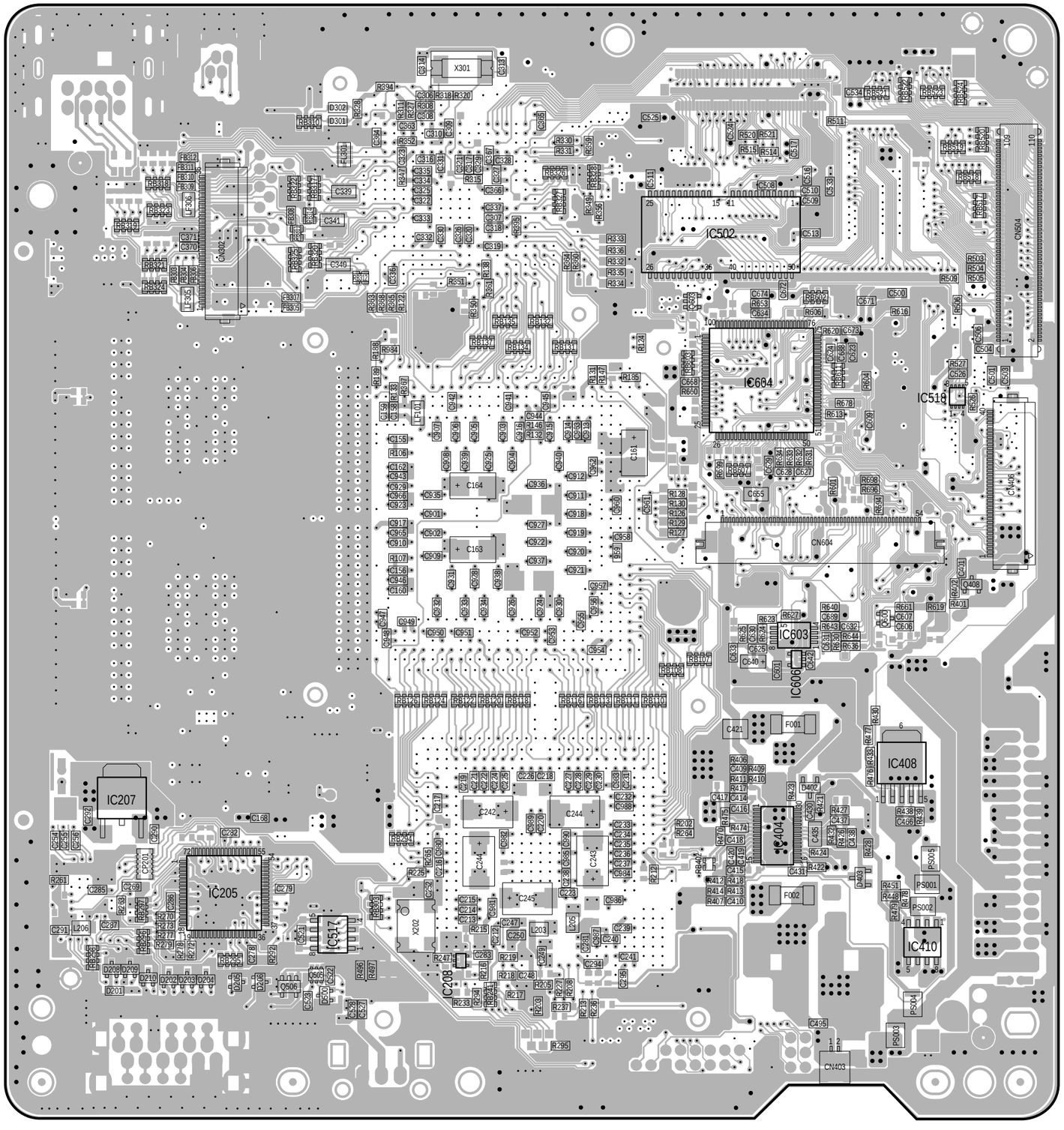

GH-006

B side

Reproduction Prohibited

IC401
S-80769SN-JO-T2
12V REG.

IC403
MM1537DFBE
RESET

IC405
RS5C348A-E2
TIMER

IC406
BR9080F-E2
EEPROM

IC402
TMP87C807C
SYSCON

IC409
SN104809DBTR

IC407
PQ01BEZ01ZP
DIG1.8V2 REG.

IC411
MM3031J
DIG1.8V REG.

IC412
SI-3025LSA-TL
DIG2.5V1 REG.

IC413
SI-3034LSA-TL
SER3.5V REG.

# IC414
TA7808F(TE16L)
CON8V REG.

TO POWER BLOCK

TO SW-355 BOARD CN851

TO GH-006/GH-007 BOARD CN408

TO GH-006/GH-007 BOARD CN406

GD-013

Reproduction Prohibited

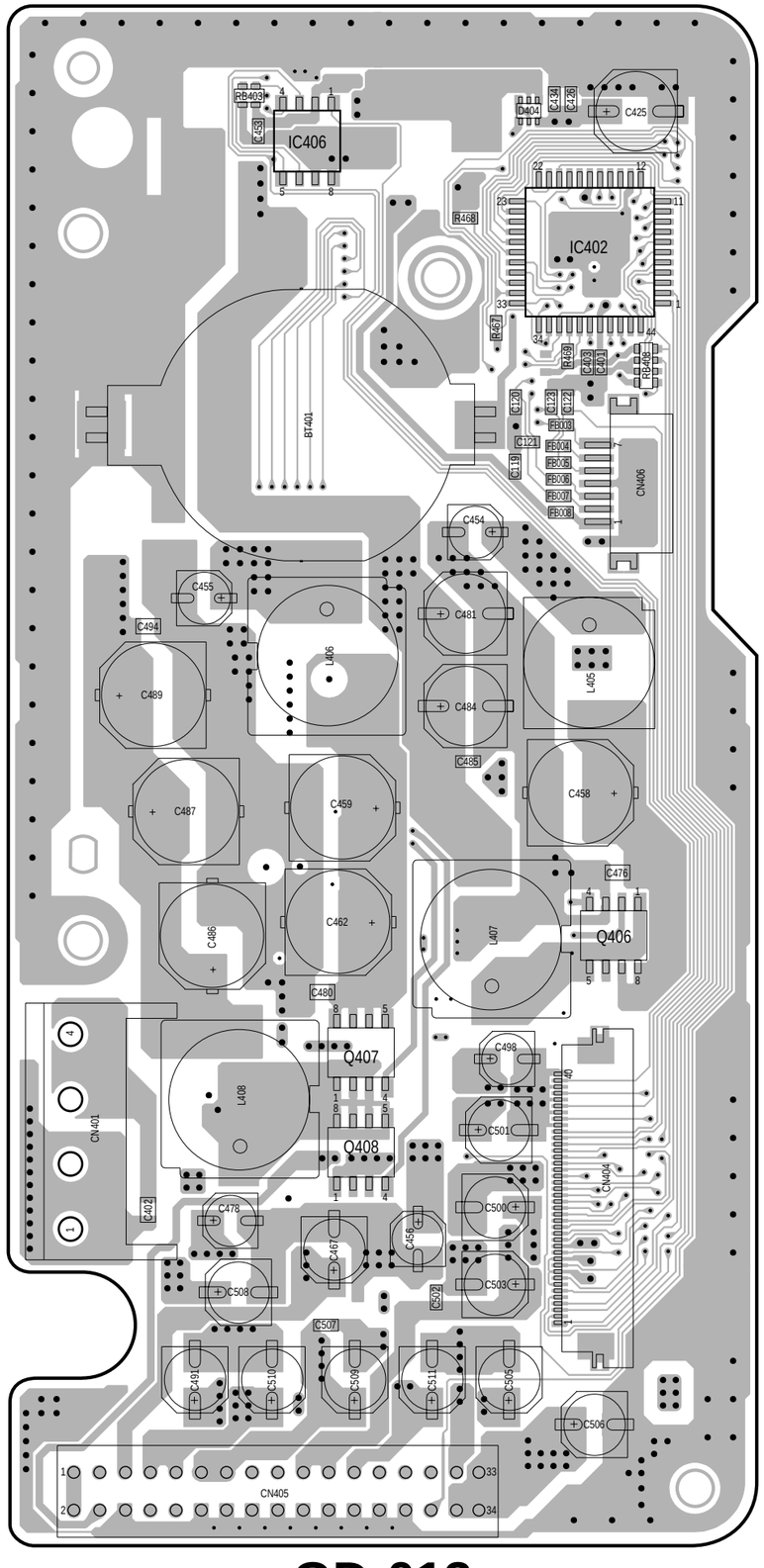

GD-013

A side

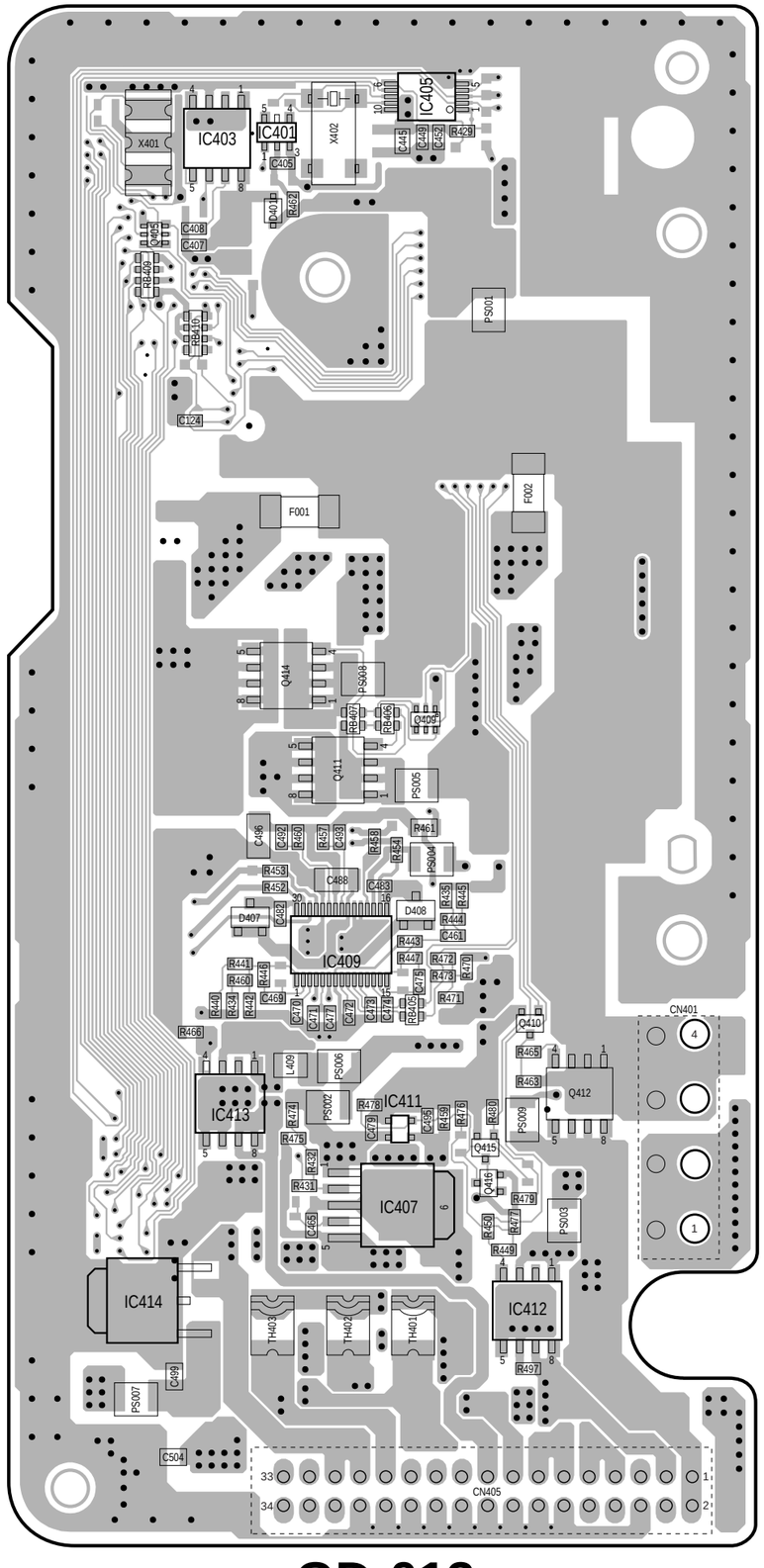

GD-013

B side

Reproduction Prohibited

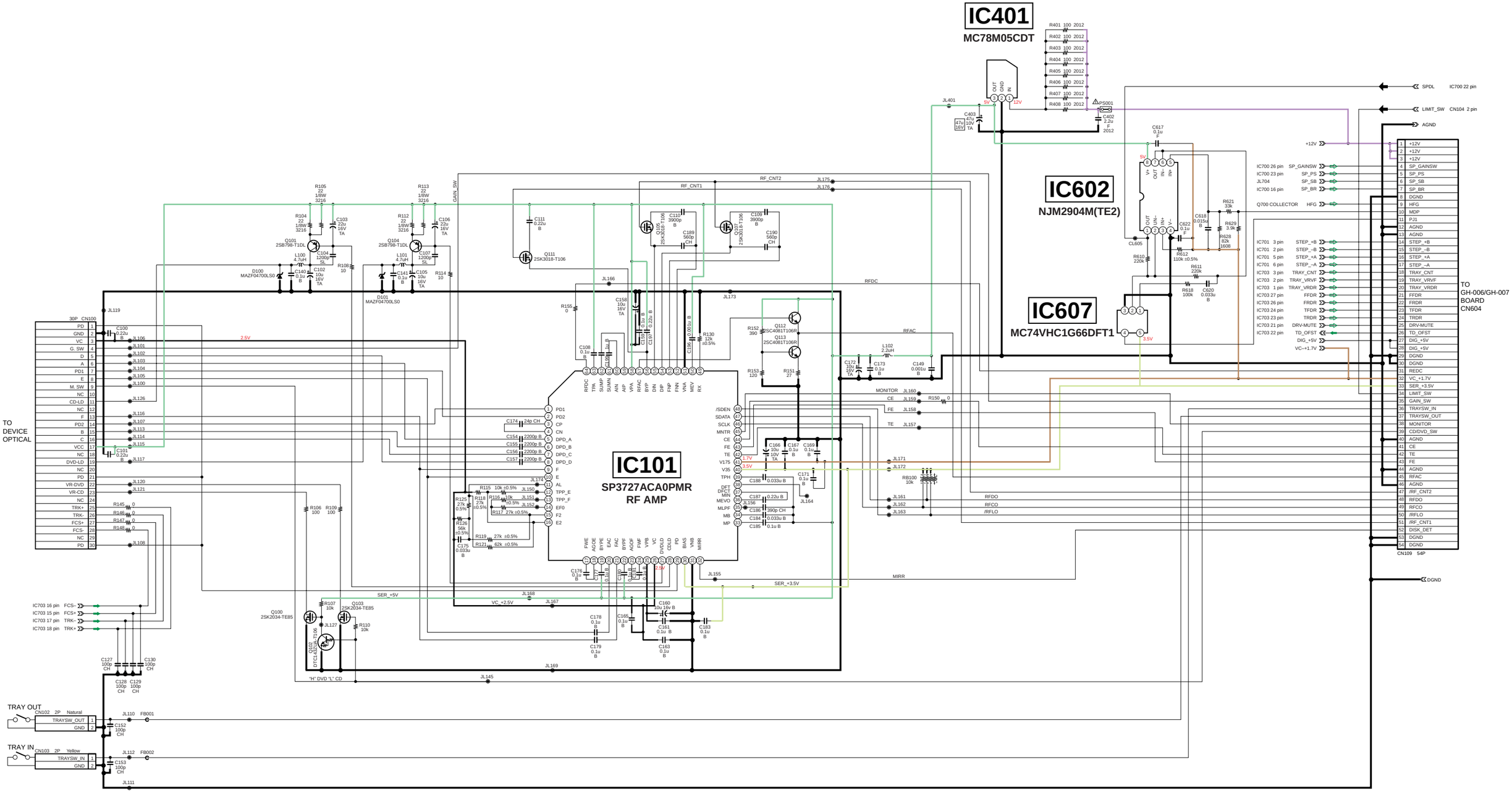

GM-043 (1/2)

Reproduction Prohibited

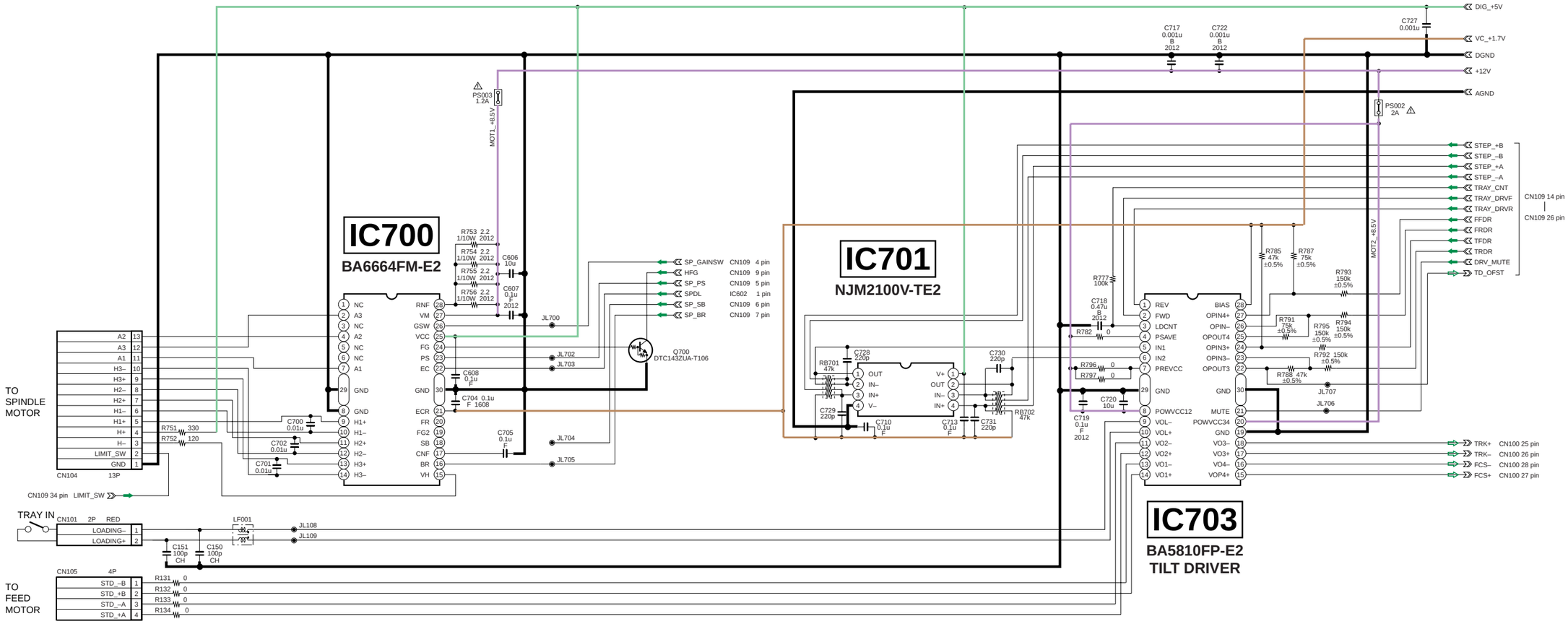

GM-043 (2/2)

Reproduction Prohibited

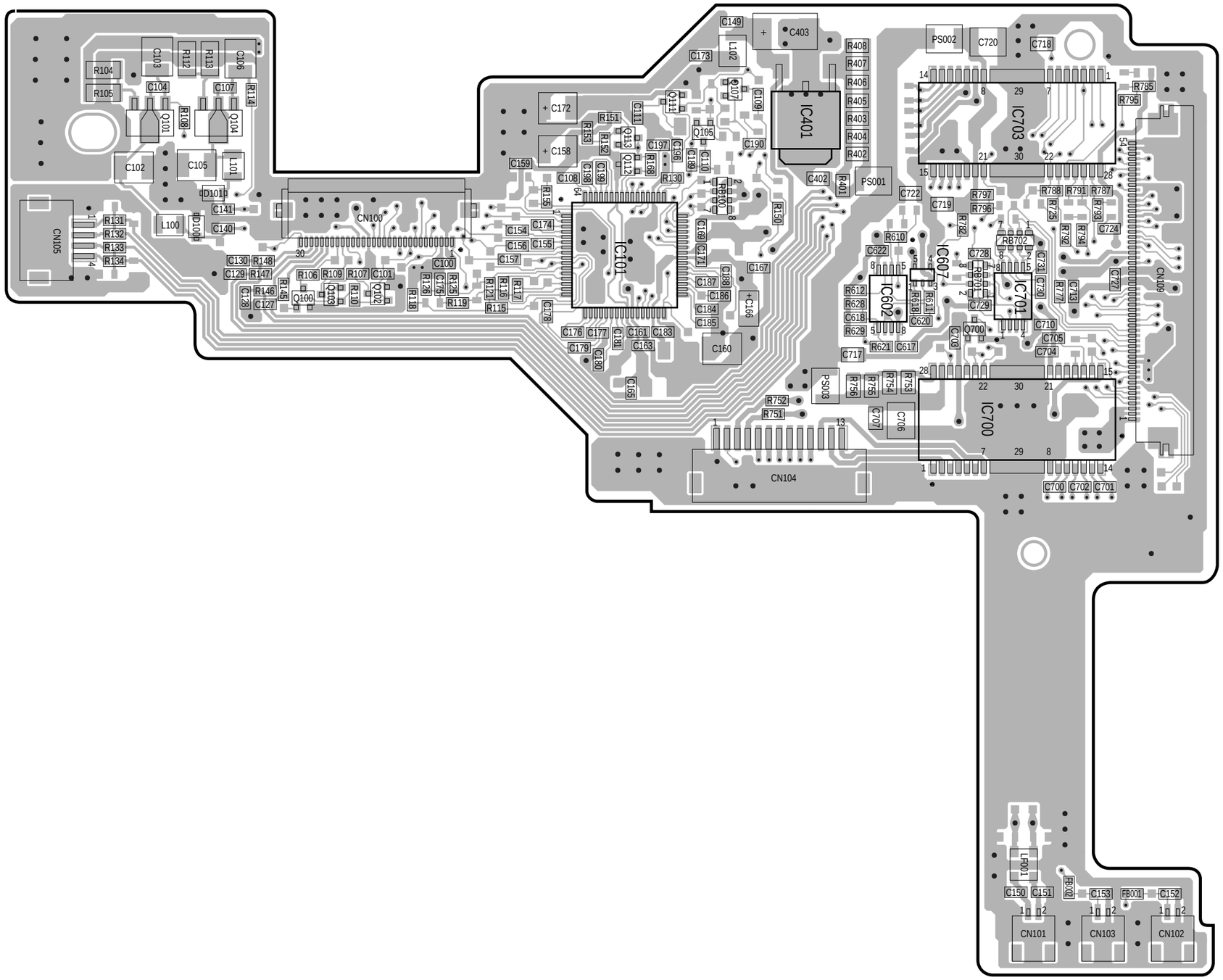

GM-043

B side

Reproduction Prohibited

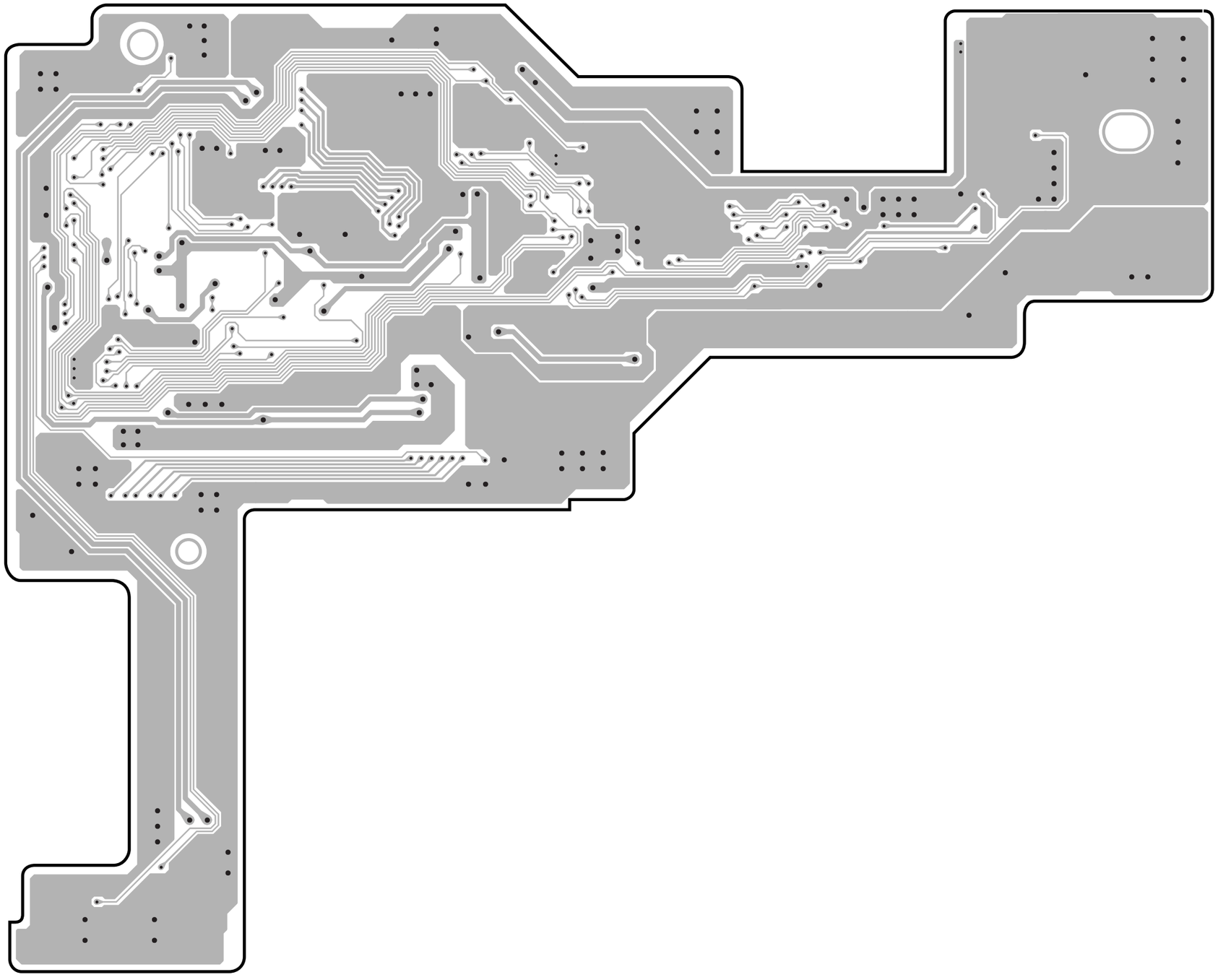

GM-043

A side

Reproduction Prohibited

GI side

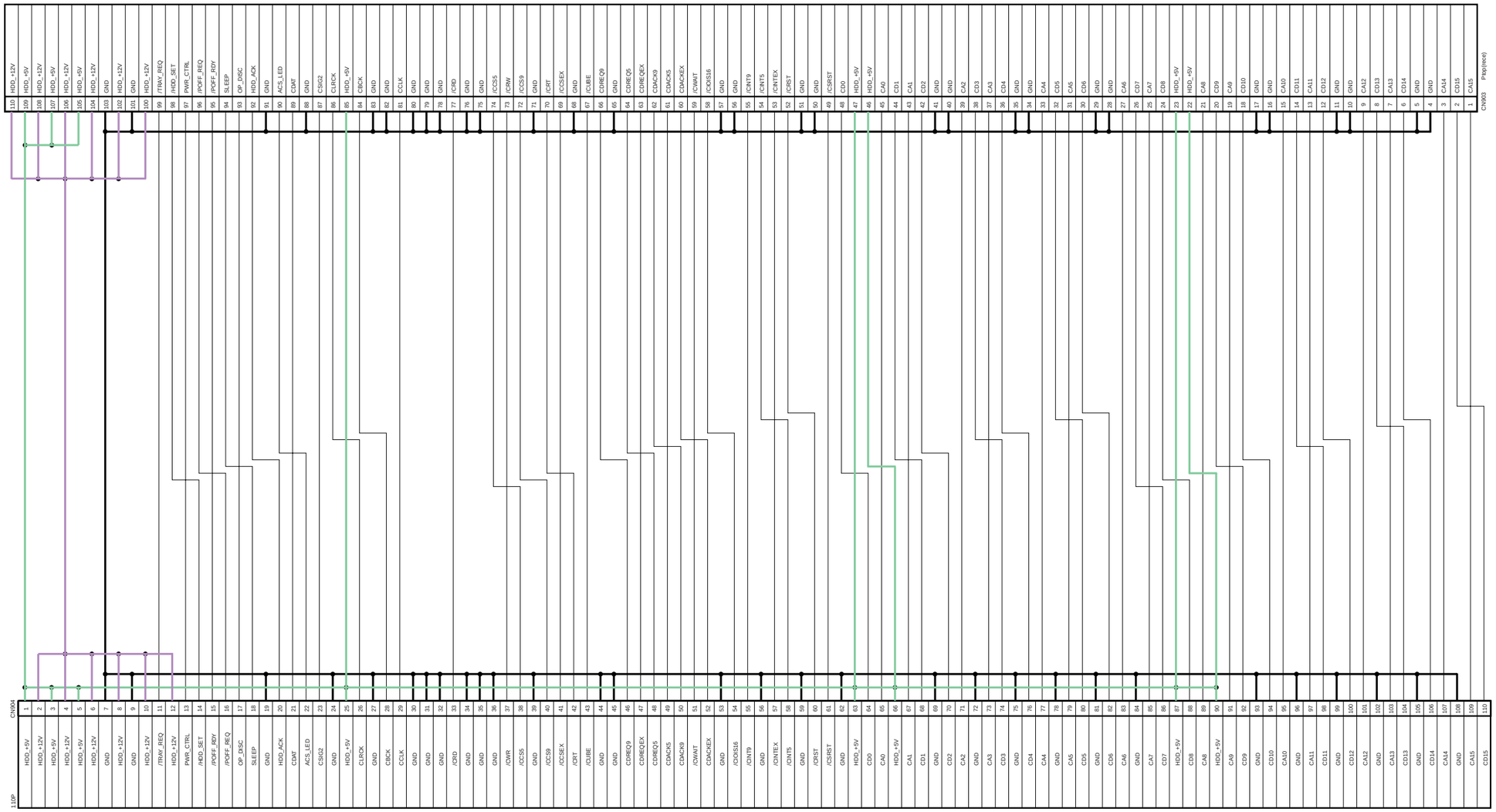

GH side

GI-006

Reproduction Prohibited

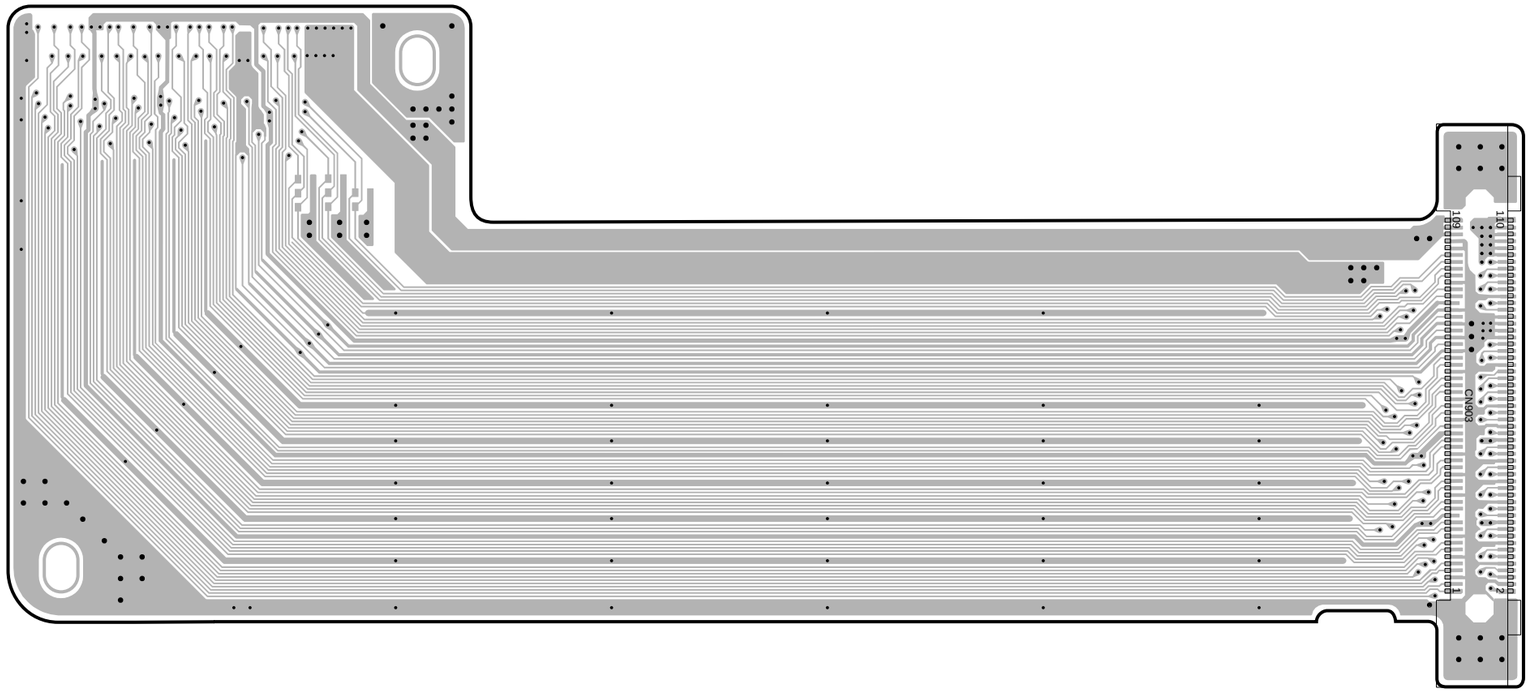

GI-006

A side

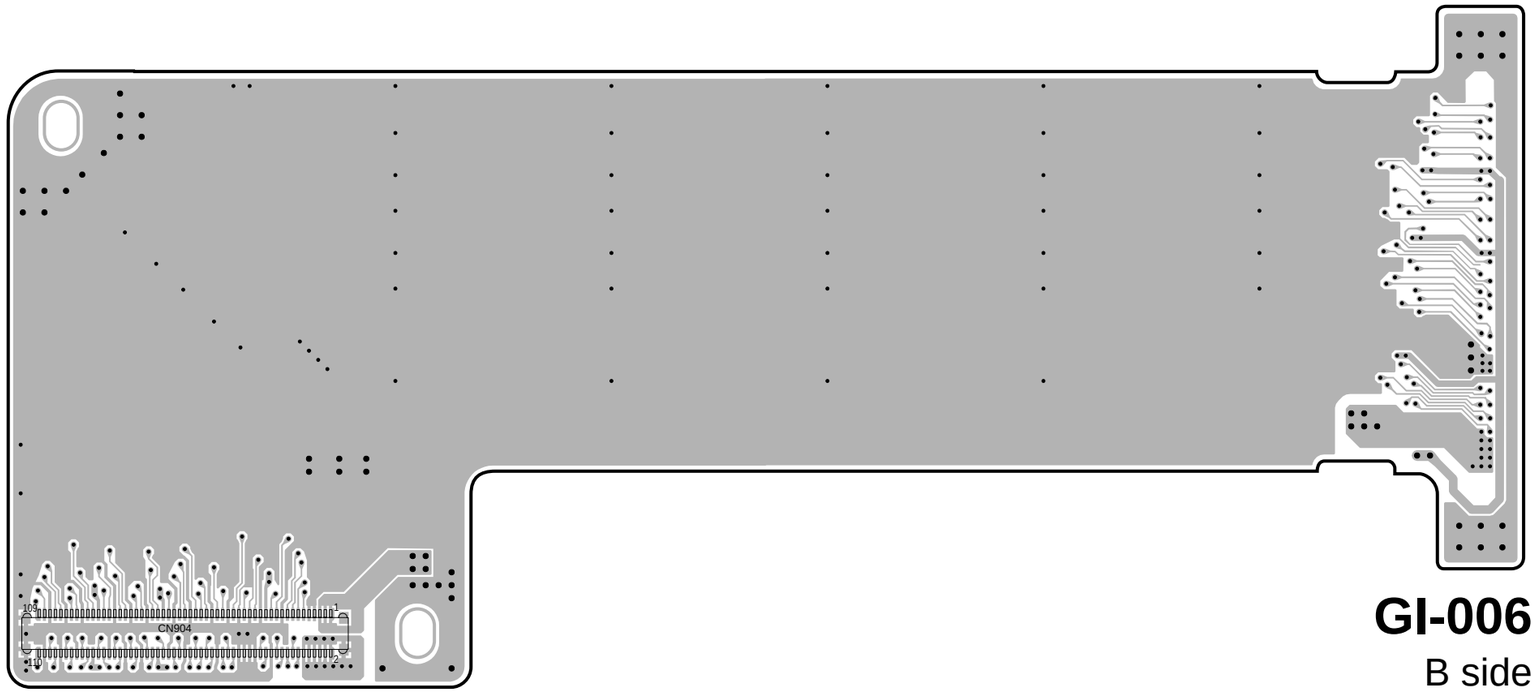

GI-006

B side

Reproduction Prohibited

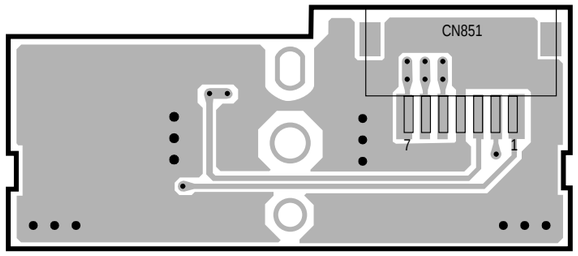

SW-355

A side

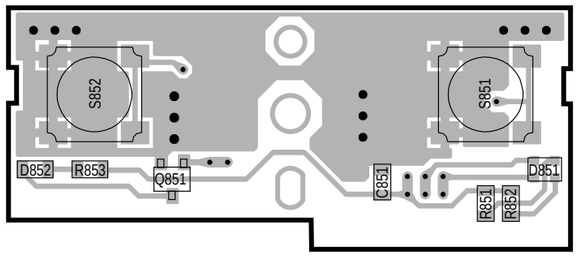

SW-355

B side

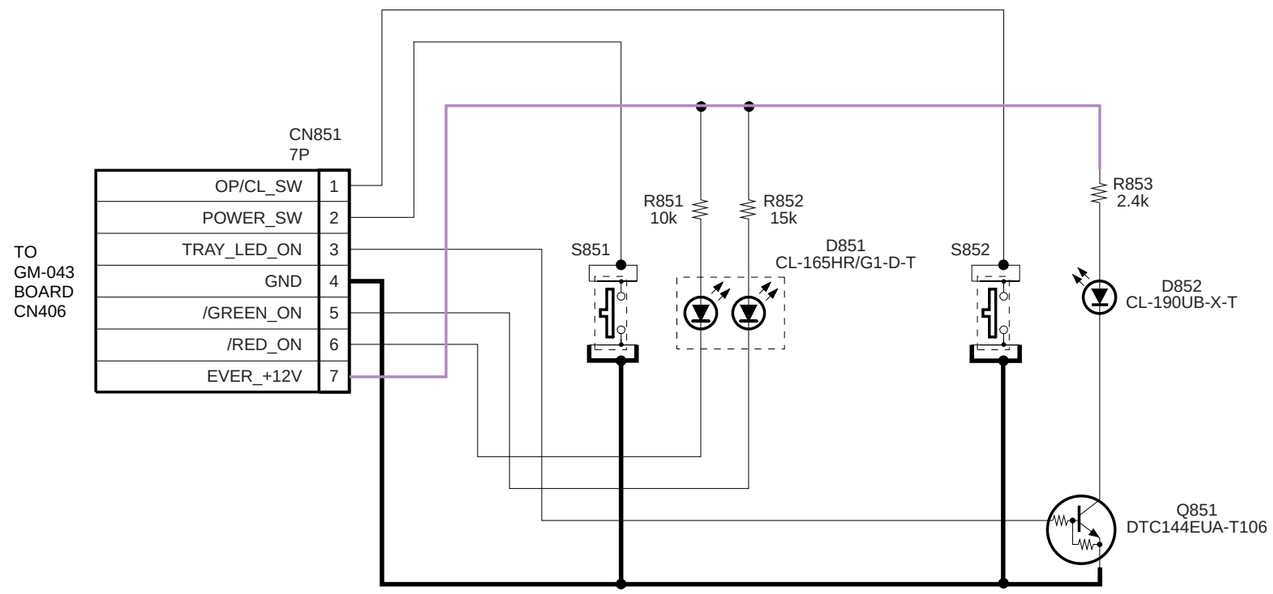

SW-355

Reproduction Prohibited

Reproduction Prohibited

IC BLOCK DIAGRAMS

CY2212ZC (IC101) [for GH Board]

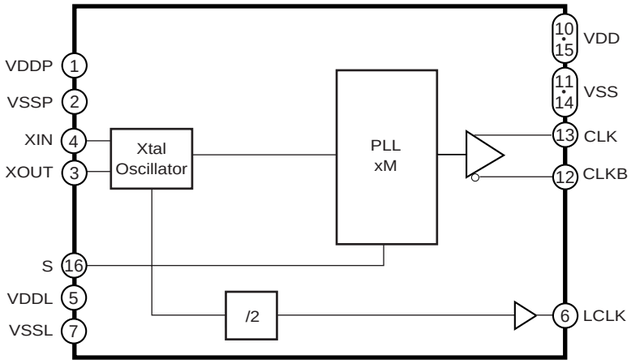

BA5912AFP-YE2 (IC102) [for GM Board]

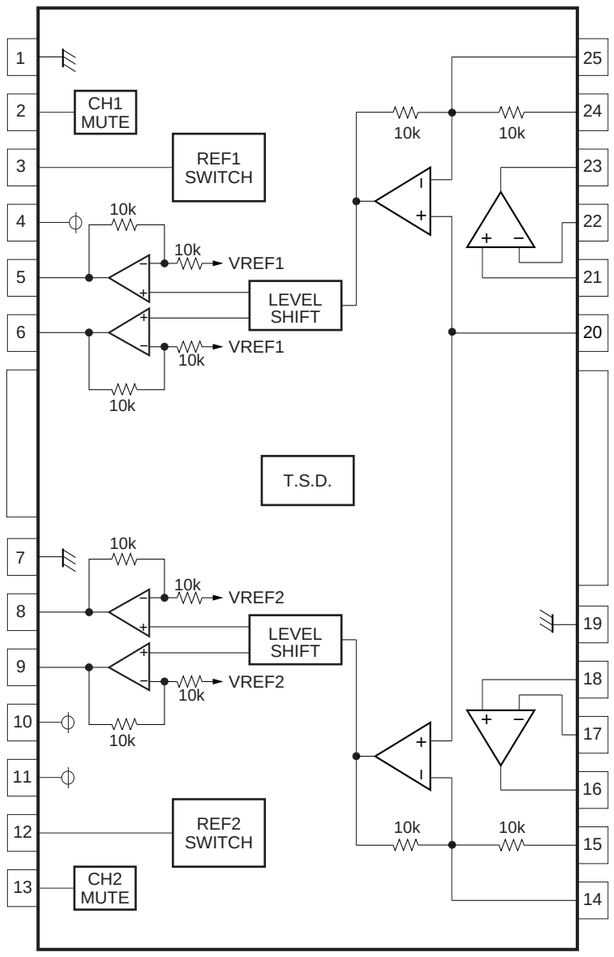

TC59RM716GB-8 (IC102, IC103) [for GH Board]

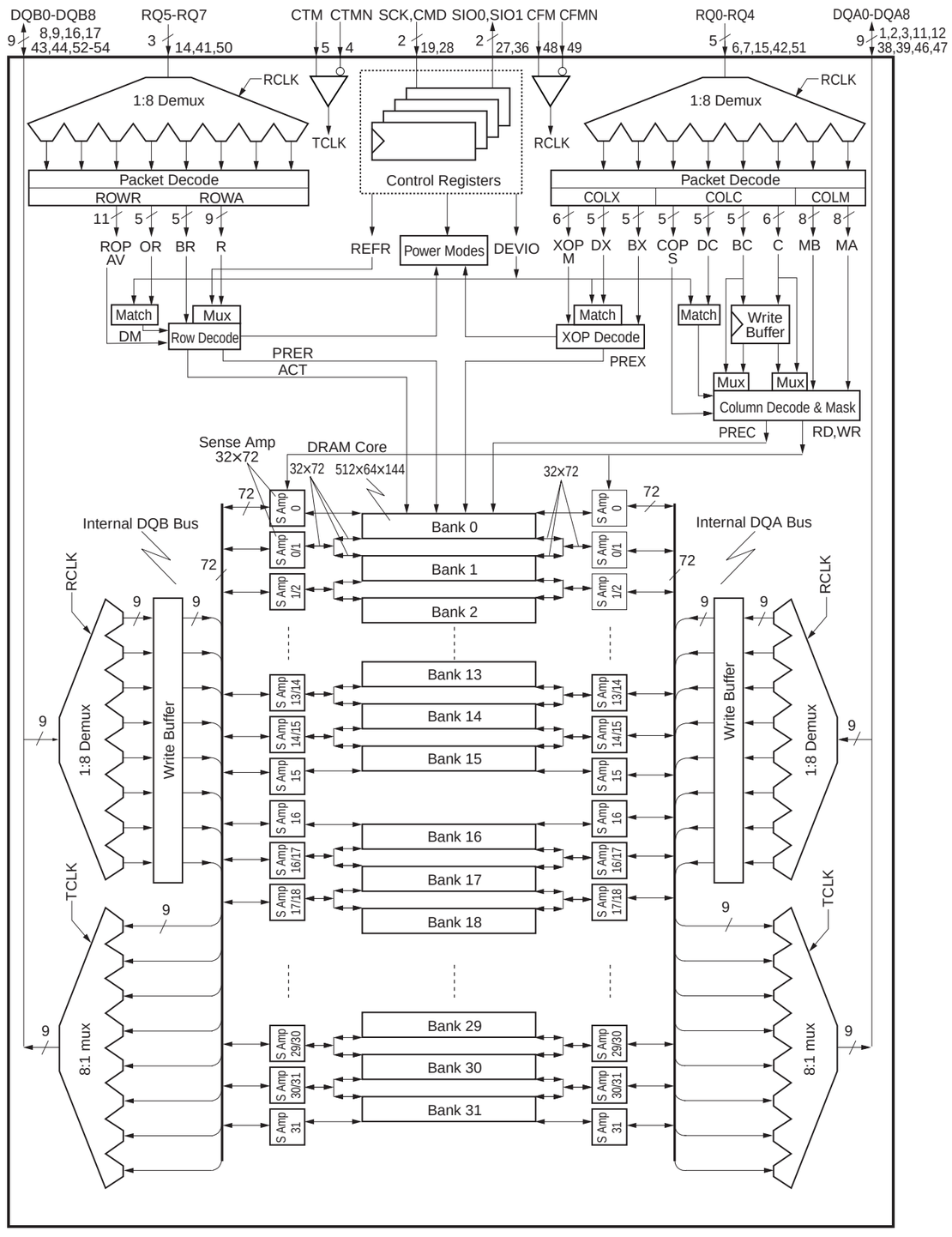

Reproduction Prohibited

SC44728PBEB (IC205) [for GH Board]

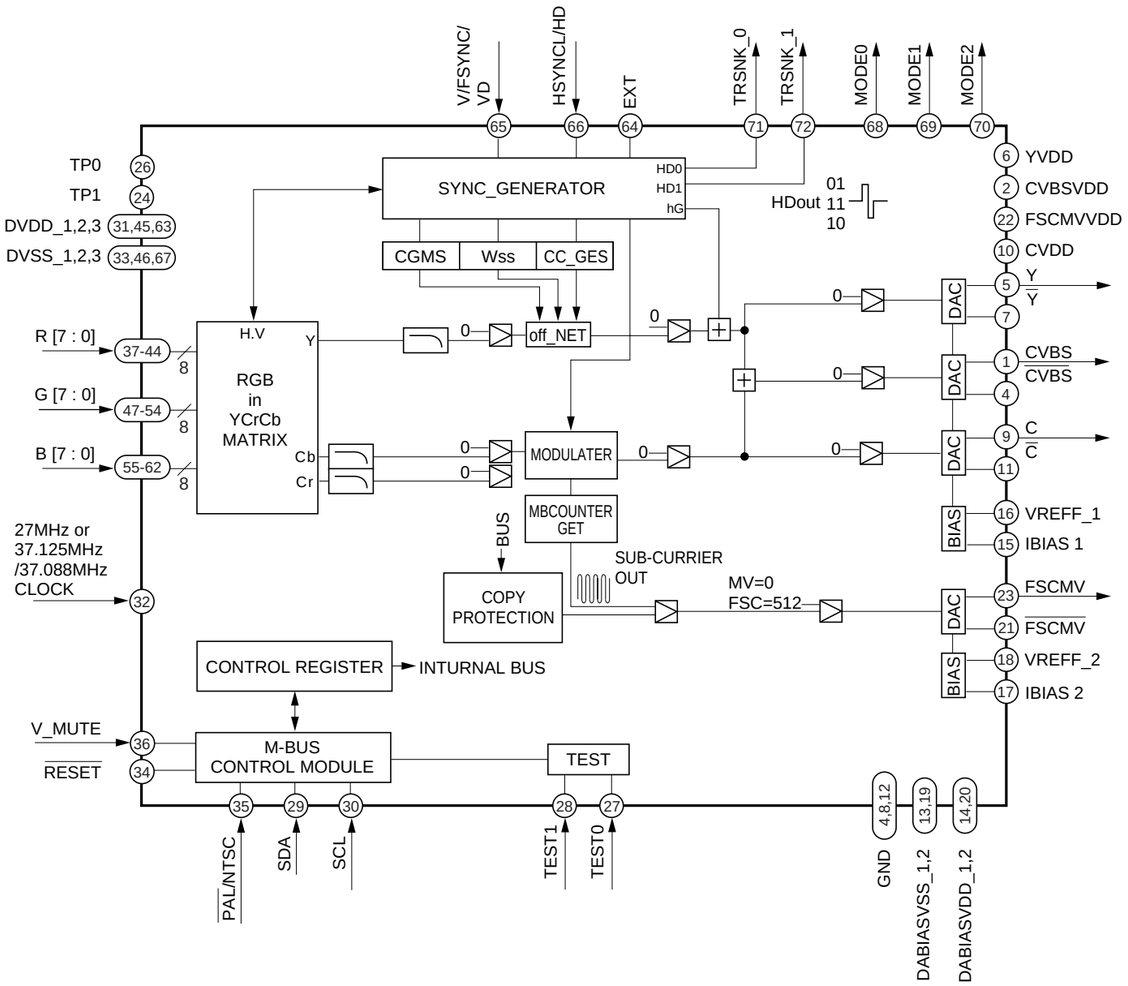

TMP87C807U (IC402) [for GD Board]

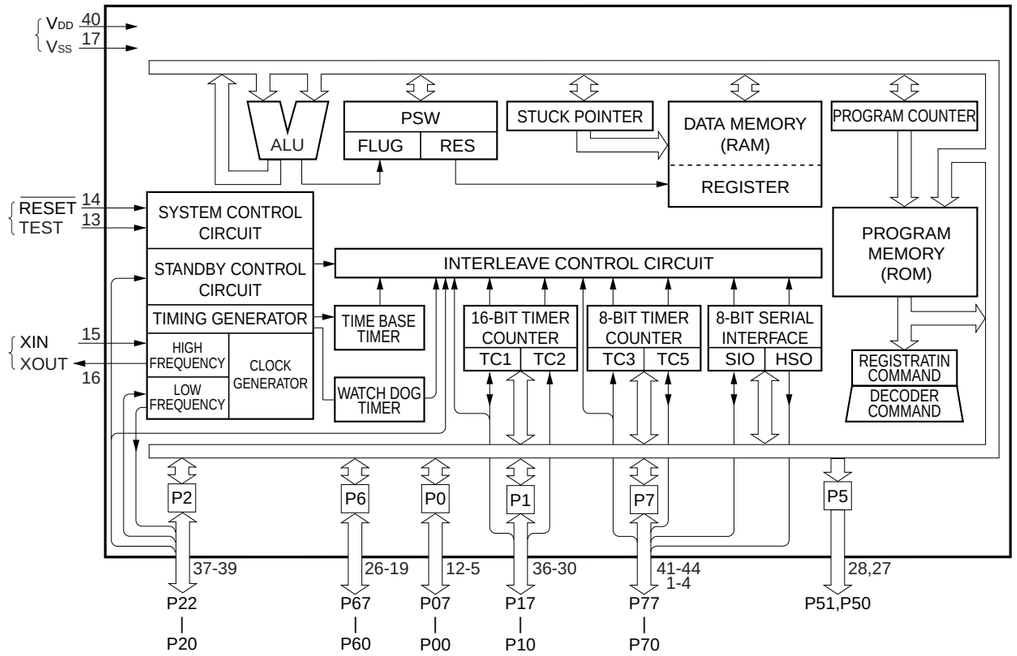

S-80769SN-JO (IC401) [for GD Board]

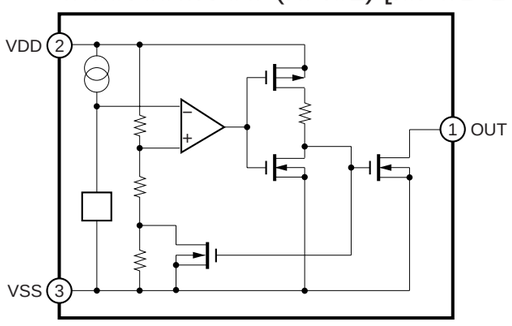

RS5C348A (IC405) [for GD Board]

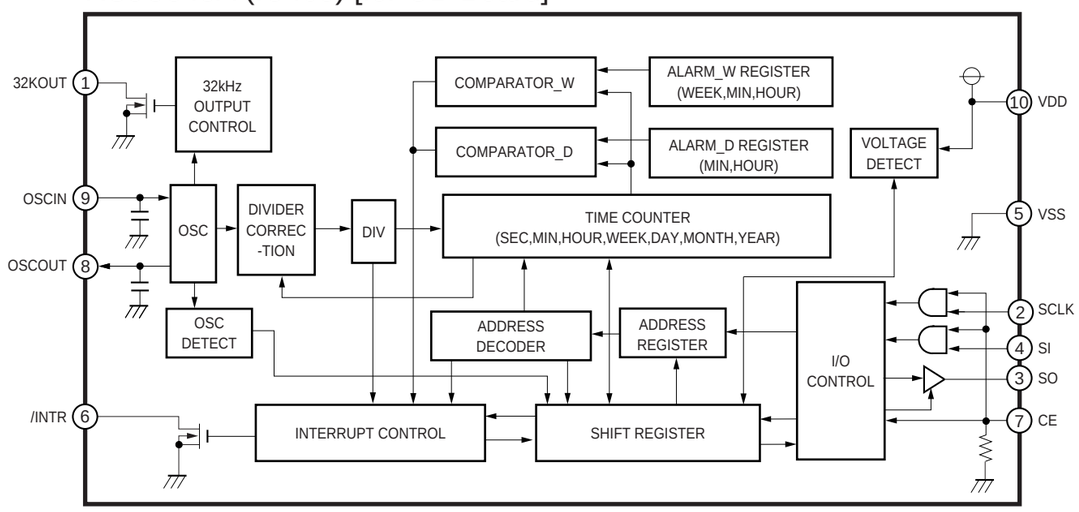

Reproduction Prohibited

T7X16 (YEL) (IC305) [for GH Board]

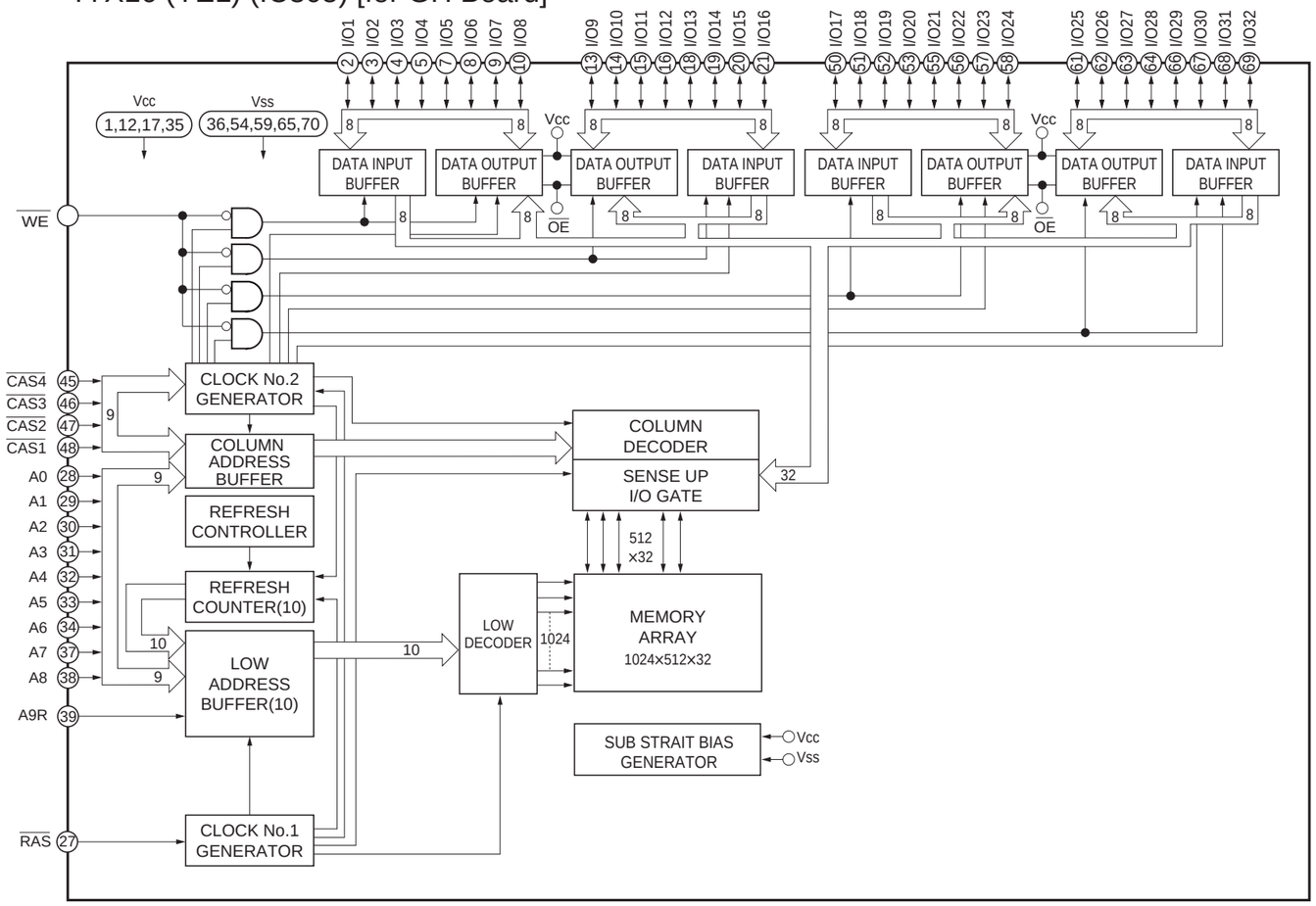

BR9080 (IC406) [for GD Board]

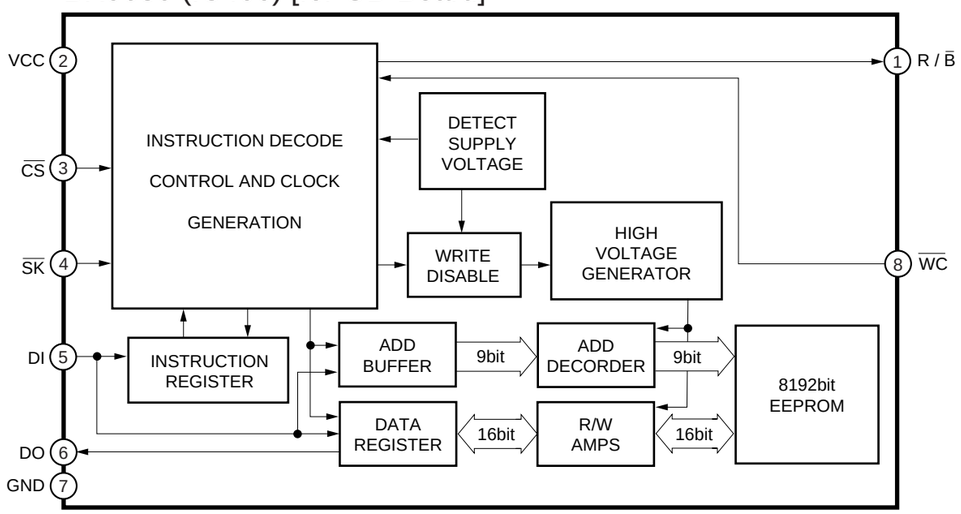

SI-3034LSA-TL (IC413) [for GD Board]

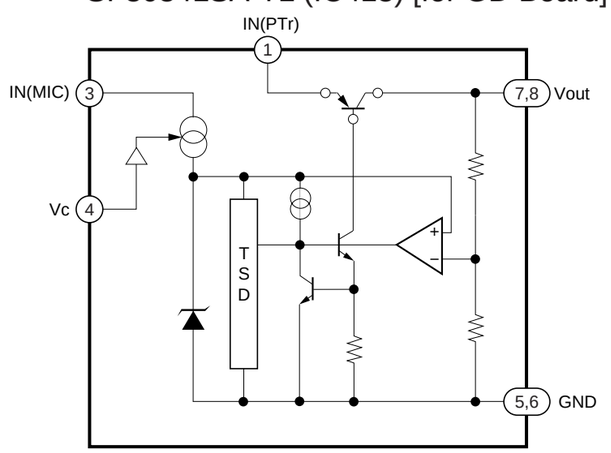

Reproduction Prohibited

CS4334 (IC517) [for GH Board]

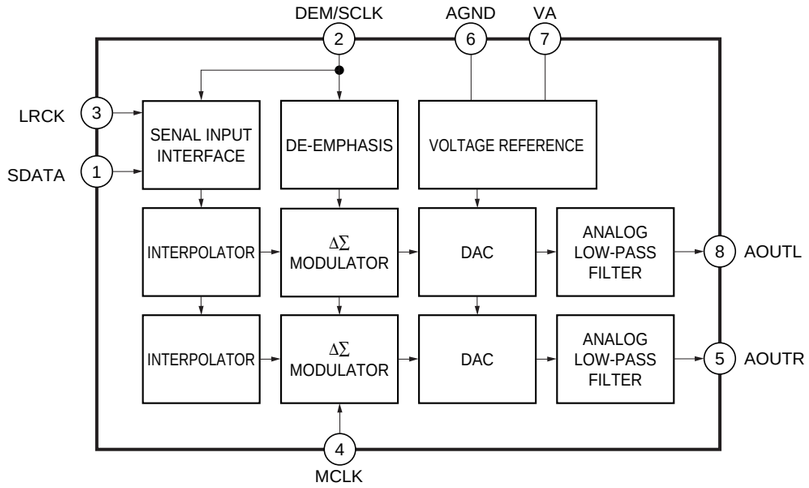

MC74VHC1G66DFT1 (IC606) [for GH Board]

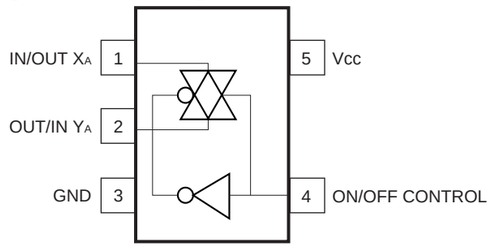

NJM2904V (IC602) [for GM Board]

BA6664FM (IC700) [for GM Board]

BA5810FP (IC703) [for GM Board]

Reproduction Prohibited

SECTION 5
ELECTRICAL PARTS LIST

NOTE :

- Due to standardization, replacements in the parts list may be different from the parts specified in the diagrams or the components used on the set.
- -XX and -X mean standardized parts, so they may have some difference from the original one.
- RESISTORS
  METAL : Metal-film resistor.
  F : nonflammable
  Unit is Ω.
- SEMICONDUCTORS
  In each case, u : μ, for example :
  uA . . : μA . . uPA . . : μPA . .
  uPB. . : μPB. . uPC . . : μPC . . uPD . . : μPD . .
- CAPACITORS
  uF : μF
- COILS
  uH : μH

The components identified by mark ⚠ or dotted line with mark. ⚠ are critical for safety. Replace only with part number specified.

When indicating parts by reference number, please include the board.

Ref.	Part No.	Description
	A-6712-838-A	**MOUNTED CIRCUIT BOARD,GH-006-11**
	A-6712-856-A	**MOUNTED CIRCUIT BOARD,GH-006-21**
		**********
		PLACE CODE #25GH
		<CAPACITOR>
C101	1-128-964-91	CAP, CHIP TANTALUM ELECT 100MF
C102	1-128-964-91	CAP, CHIP TANTALUM ELECT 100MF
C103	1-128-964-91	CAP, CHIP TANTALUM ELECT 100MF
C104	1-107-826-91	CAP, CHIP CERAMIC 100000PF B
C105	1-107-826-91	CAP, CHIP CERAMIC 100000PF B
C106	1-107-826-91	CAP, CHIP CERAMIC 100000PF B
C107	1-107-826-91	CAP, CHIP CERAMIC 100000PF B
C108	1-107-826-91	CAP, CHIP CERAMIC 100000PF B
C109	1-107-826-91	CAP, CHIP CERAMIC 100000PF B
C110	1-107-826-91	CAP, CHIP CERAMIC 100000PF B
C111	1-107-826-91	CAP, CHIP CERAMIC 100000PF B
C112	1-107-826-91	CAP, CHIP CERAMIC 100000PF B
C113	1-107-826-91	CAP, CHIP CERAMIC 100000PF B
C114	1-107-826-91	CAP, CHIP CERAMIC 100000PF B
C115	1-107-826-91	CAP, CHIP CERAMIC 100000PF B
C116	1-107-826-91	CAP, CHIP CERAMIC 100000PF B
C117	1-107-826-91	CAP, CHIP CERAMIC 100000PF B
C118	1-107-826-91	CAP, CHIP CERAMIC 100000PF B
C119	1-107-826-91	CAP, CHIP CERAMIC 100000PF B
C120	1-107-826-91	CAP, CHIP CERAMIC 100000PF B
C121	1-107-826-91	CAP, CHIP CERAMIC 100000PF B
C122	1-107-826-91	CAP, CHIP CERAMIC 100000PF B
C123	1-107-826-91	CAP, CHIP CERAMIC 100000PF B
C124	1-107-826-91	CAP, CHIP CERAMIC 100000PF B
C125	1-107-826-91	CAP, CHIP CERAMIC 100000PF B
C126	1-107-826-91	CAP, CHIP CERAMIC 100000PF B
C127	1-107-826-91	CAP, CHIP CERAMIC 100000PF B
C128	1-107-826-91	CAP, CHIP CERAMIC 100000PF B
C129	1-107-826-91	CAP, CHIP CERAMIC 100000PF B
C131	1-162-970-91	CAP, CERAMIC 10000PF B (1608)
C132	1-107-826-91	CAP, CHIP CERAMIC 100000PF B
C134	1-107-826-91	CAP, CHIP CERAMIC 100000PF B
C135	1-107-826-91	CAP, CHIP CERAMIC 100000PF B
C136	1-162-964-91	CAP,CHIP CERAMIC 1000PF B (1608)
C137	1-107-826-91	CAP, CHIP CERAMIC 100000PF B
C138	1-107-826-91	CAP, CHIP CERAMIC 100000PF B
C139	1-107-826-91	CAP, CHIP CERAMIC 100000PF B
C140	1-107-826-91	CAP, CHIP CERAMIC 100000PF B
C141	1-135-609-91	CAP, CHIP TANTALUM ELECT 220MF
C142	1-107-826-91	CAP, CHIP CERAMIC 100000PF B
C143	1-107-826-91	CAP, CHIP CERAMIC 100000PF B
C144	1-107-826-91	CAP, CHIP CERAMIC 100000PF B
C145	1-107-826-91	CAP, CHIP CERAMIC 100000PF B
C146	1-162-964-91	CAP,CHIP CERAMIC 1000PF B (1608)
C147	1-162-964-91	CAP,CHIP CERAMIC 1000PF B (1608)
C148	1-107-826-91	CAP, CHIP CERAMIC 100000PF B
C149	1-107-826-91	CAP, CHIP CERAMIC 100000PF B
C150	1-162-970-91	CAP, CERAMIC 10000PF B (1608)
C151	1-164-160-91	CAP,CERAMIC 20PF CH (1608)
C152	1-164-160-91	CAP,CERAMIC 20PF CH (1608)
C153	1-162-970-91	CAP, CERAMIC 10000PF B (1608)
C154	1-162-970-91	CAP, CERAMIC 10000PF B (1608)
C155	1-107-826-91	CAP, CHIP CERAMIC 100000PF B
C156	1-107-826-91	CAP, CHIP CERAMIC 100000PF B
C157	1-107-826-91	CAP, CHIP CERAMIC 100000PF B
C158	1-162-970-91	CAP, CERAMIC 10000PF B (1608)
C159	1-107-826-91	CAP, CHIP CERAMIC 100000PF B
C160	1-162-925-91	CAP, CERAMIC 68PF CH (1608)
C161	1-128-964-91	CAP, CHIP TANTALUM ELECT 100MF
C162	1-162-925-91	CAP, CERAMIC 68PF CH (1608)
C163	1-128-964-91	CAP, CHIP TANTALUM ELECT 100MF
C164	1-128-964-91	CAP, CHIP TANTALUM ELECT 100MF
C168	1-162-964-91	CAP,CHIP CERAMIC 1000PF B (1608)
C169	1-162-927-91	CAP, CERAMIC 100PF CH (1608)
C170	1-125-837-91	CAP, CHIP CERAMIC 1MF B (1608)
C175	1-107-826-91	CAP, CHIP CERAMIC 100000PF B
C176	1-107-826-91	CAP, CHIP CERAMIC 100000PF B
C212	1-125-837-91	CAP, CHIP CERAMIC 1MF B (1608)
C213	1-125-837-91	CAP, CHIP CERAMIC 1MF B (1608)
C214	1-125-837-91	CAP, CHIP CERAMIC 1MF B (1608)
C215	1-125-837-91	CAP, CHIP CERAMIC 1MF B (1608)
C216	1-125-837-91	CAP, CHIP CERAMIC 1MF B (1608)
C217	1-125-837-91	CAP, CHIP CERAMIC 1MF B (1608)
C218	1-125-837-91	CAP, CHIP CERAMIC 1MF B (1608)
C219	1-125-837-91	CAP, CHIP CERAMIC 1MF B (1608)
C220	1-125-837-91	CAP, CHIP CERAMIC 1MF B (1608)
C221	1-125-837-91	CAP, CHIP CERAMIC 1MF B (1608)
C222	1-125-837-91	CAP, CHIP CERAMIC 1MF B (1608)
C223	1-125-837-91	CAP, CHIP CERAMIC 1MF B (1608)
C224	1-125-837-91	CAP, CHIP CERAMIC 1MF B (1608)
C225	1-125-837-91	CAP, CHIP CERAMIC 1MF B (1608)
C226	1-125-837-91	CAP, CHIP CERAMIC 1MF B (1608)
C227	1-125-837-91	CAP, CHIP CERAMIC 1MF B (1608)
C228	1-125-837-91	CAP, CHIP CERAMIC 1MF B (1608)
C229	1-125-837-91	CAP, CHIP CERAMIC 1MF B (1608)
C230	1-125-837-91	CAP, CHIP CERAMIC 1MF B (1608)
C231	1-125-837-91	CAP, CHIP CERAMIC 1MF B (1608)
C232	1-125-837-91	CAP, CHIP CERAMIC 1MF B (1608)
C233	1-125-837-91	CAP, CHIP CERAMIC 1MF B (1608)
C234	1-125-837-91	CAP, CHIP CERAMIC 1MF B (1608)
C235	1-125-837-91	CAP, CHIP CERAMIC 1MF B (1608)
C236	1-125-837-91	CAP, CHIP CERAMIC 1MF B (1608)
C237	1-125-837-91	CAP, CHIP CERAMIC 1MF B (1608)
C238	1-125-837-91	CAP, CHIP CERAMIC 1MF B (1608)
C239	1-125-837-91	CAP, CHIP CERAMIC 1MF B (1608)
C240	1-125-837-91	CAP, CHIP CERAMIC 1MF B (1608)
C241	1-125-837-91	CAP, CHIP CERAMIC 1MF B (1608)
C242	1-128-707-22	CAP, TANTALUM ELECT (SMD)220
C243	1-135-609-91	CAP, CHIP TANTALUM ELECT 220MF
C244	1-128-707-22	CAP, TANTALUM ELECT (SMD)220
C245	1-128-707-22	CAP, TANTALUM ELECT (SMD)220
C247	1-107-826-91	CAP, CHIP CERAMIC 100000PF B
C248	1-107-826-91	CAP, CHIP CERAMIC 100000PF B
C249	1-115-156-91	CAP, CERAMIC 1000000PF F (1608)
C250	1-127-760-91	CAP, CERAMIC 4.7MF (2012)
C252	1-107-826-91	CAP, CHIP CERAMIC 100000PF B
C254	1-107-826-91	CAP, CHIP CERAMIC 100000PF B
C255	1-107-826-91	CAP, CHIP CERAMIC 100000PF B
C256	1-107-826-91	CAP, CHIP CERAMIC 100000PF B
C257	1-125-837-91	CAP, CHIP CERAMIC 1MF B (1608)
C261	1-128-004-21	CAP, ELECT (CHIP) 10MF
C262	1-128-004-21	CAP, ELECT (CHIP) 10MF
C263	1-128-004-21	CAP, ELECT (CHIP) 10MF
C265	1-117-720-91	CAP, CERAMIC 4.7MF F (2012)
C266	1-128-004-21	CAP, ELECT (CHIP) 10MF
C267	1-126-210-21	CAP, ELECT 220MF
C268	1-126-210-21	CAP, ELECT 220MF
C269	1-164-160-91	CAP,CERAMIC 20PF CH (1608)
C270	1-125-777-81	CAP, CHIP CERAMIC 0.1MF B (1005)
C271	1-125-777-81	CAP, CHIP CERAMIC 0.1MF B (1005)
C272	1-125-777-81	CAP, CHIP CERAMIC 0.1MF B (1005)
C275	1-125-777-81	CAP, CHIP CERAMIC 0.1MF B (1005)
C276	1-164-874-81	CAP,CHIP CERAMIC 100PF CH (1005)
C277	1-164-874-81	CAP,CHIP CERAMIC 100PF CH (1005)
C278	1-113-619-91	CAP, CERAMIC 470000PF F (1608)
C279	1-113-619-91	CAP, CERAMIC 470000PF F (1608)
C281	1-115-156-91	CAP, CERAMIC 1000000PF F (1608)
C282	1-113-619-91	CAP, CERAMIC 470000PF F (1608)
C283	1-107-826-91	CAP, CHIP CERAMIC 100000PF B
C285	1-113-619-91	CAP, CERAMIC 470000PF F (1608)
C286	1-113-619-91	CAP, CERAMIC 470000PF F (1608)
C287	1-107-826-91	CAP, CHIP CERAMIC 100000PF B
C288	1-125-837-91	CAP, CHIP CERAMIC 1MF B (1608)
C289	1-164-937-81	CAP, CHIPCERAMIC 1000PF B (1005)
C290	1-113-619-91	CAP, CERAMIC 470000PF F (1608)
C291	1-162-921-91	CAP, CERAMIC 33PF CH (1608)
C292	1-107-725-91	CAP, CERAMIC 100000PF B (2012)
C293	1-137-765-21	CAP, ELECT 47MF
C294	1-107-826-91	CAP, CHIP CERAMIC 100000PF B
C295	1-107-826-91	CAP, CHIP CERAMIC 100000PF B
C296	1-126-210-21	CAP, ELECT 220MF
C297	1-126-210-21	CAP, ELECT 220MF
C298	1-126-210-21	CAP, ELECT 220MF
C302	1-125-777-81	CAP, CHIP CERAMIC 0.1MF B (1005)
C303	1-125-777-81	CAP, CHIP CERAMIC 0.1MF B (1005)
C304	1-164-937-81	CAP, CHIPCERAMIC 1000PF B (1005)
C306	1-164-387-91	CAP, CERAMIC 240PF CH (1608)
C307	1-107-826-91	CAP, CHIP CERAMIC 100000PF B
C308	1-165-112-91	CAP, CERAMIC 330000PF F (1608)
C309	1-162-970-91	CAP, CERAMIC 10000PF B (1608)
C310	1-162-970-91	CAP, CERAMIC 10000PF B (1608)
C311	1-162-916-91	CAP, CERAMIC 12PF CH (1608)
C312	1-162-917-91	CAP, CERAMIC 15PF CH (1608)
C313	1-162-910-91	CAP, CERAMIC 5.0PF CH (1608)
C314	1-162-910-91	CAP, CERAMIC 5.0PF CH (1608)
C315	1-125-777-81	CAP, CHIP CERAMIC 0.1MF B (1005)
C316	1-165-112-91	CAP, CERAMIC 330000PF F (1608)
C317	1-162-970-91	CAP, CERAMIC 10000PF B (1608)
C318	1-162-970-91	CAP, CERAMIC 10000PF B (1608)
C319	1-162-970-91	CAP, CERAMIC 10000PF B (1608)
C320	1-162-970-91	CAP, CERAMIC 10000PF B (1608)
C321	1-162-970-91	CAP, CERAMIC 10000PF B (1608)
C322	1-162-970-91	CAP, CERAMIC 10000PF B (1608)
C323	1-162-970-91	CAP, CERAMIC 10000PF B (1608)
C325	1-162-970-91	CAP, CERAMIC 10000PF B (1608)
C326	1-162-970-91	CAP, CERAMIC 10000PF B (1608)
C328	1-162-970-91	CAP, CERAMIC 10000PF B (1608)
C329	1-162-970-91	CAP, CERAMIC 10000PF B (1608)
C330	1-162-970-91	CAP, CERAMIC 10000PF B (1608)
C331	1-162-970-91	CAP, CERAMIC 10000PF B (1608)
C332	1-162-970-91	CAP, CERAMIC 10000PF B (1608)
C333	1-162-970-91	CAP, CERAMIC 10000PF B (1608)
C334	1-162-970-91	CAP, CERAMIC 10000PF B (1608)
C335	1-162-970-91	CAP, CERAMIC 10000PF B (1608)
C336	1-162-970-91	CAP, CERAMIC 10000PF B (1608)
C337	1-162-970-91	CAP, CERAMIC 10000PF B (1608)
C338	1-107-826-91	CAP, CHIP CERAMIC 100000PF B
C339	1-125-764-41	CAP, CHIP CERAMIC 100PF CH
C340	1-125-764-41	CAP, CHIP CERAMIC 100PF CH
C341	1-125-764-41	CAP, CHIP CERAMIC 100PF CH
C355	1-107-826-91	CAP, CHIP CERAMIC 100000PF B
C356	1-107-826-91	CAP, CHIP CERAMIC 100000PF B
C363	1-107-826-91	CAP, CHIP CERAMIC 100000PF B
C364	1-107-826-91	CAP, CHIP CERAMIC 100000PF B
C365	1-107-826-91	CAP, CHIP CERAMIC 100000PF B
C366	1-107-826-91	CAP, CHIP CERAMIC 100000PF B
C367	1-107-826-91	CAP, CHIP CERAMIC 100000PF B
C368	1-125-777-81	CAP, CHIP CERAMIC 0.1MF B (1005)
C369	1-125-777-81	CAP, CHIP CERAMIC 0.1MF B (1005)
C370	1-162-964-91	CAP,CHIP CERAMIC 1000PF B (1608)
C371	1-162-964-91	CAP,CHIP CERAMIC 1000PF B (1608)
C372	1-128-995-21	CAP, ELECT 100MF
C373	1-128-995-21	CAP, ELECT 100MF
C401	1-162-964-91	CAP,CHIP CERAMIC 1000PF B (1608)
C409	1-162-969-91	CAP, CERAMIC 6800PF B (1608)
C410	1-162-969-91	CAP, CERAMIC 6800PF B (1608)
C414	1-162-965-91	CAP, CERAMIC 1500PF B (1608)
C415	1-162-965-91	CAP, CERAMIC 1500PF B (1608)
C416	1-107-826-91	CAP, CHIP CERAMIC 100000PF B
C417	1-164-379-91	CAP, CERAMIC 43PF CH (1608)
C418	1-107-826-91	CAP, CHIP CERAMIC 100000PF B
C419	1-162-970-91	CAP, CERAMIC 10000PF B (1608)
C420	1-107-826-91	CAP, CHIP CERAMIC 100000PF B
C421	1-127-692-91	CAP, CHIP CERAMIC 10MF B 3225
C422	1-135-347-21	CAP, SOLID ELECT 82MF
C423	1-135-347-21	CAP, SOLID ELECT 82MF
C424	1-127-692-91	CAP, CHIP CERAMIC 10MF B 3225
C427	1-135-347-21	CAP, SOLID ELECT 82MF
C430	1-107-826-91	CAP, CHIP CERAMIC 100000PF B
C431	1-107-826-91	CAP, CHIP CERAMIC 100000PF B
C432	1-115-339-91	CAP, CERAMIC 0.1MF B (2012)
C433	1-115-339-91	CAP, CERAMIC 0.1MF B (2012)
C435	1-115-566-91	CAP, CERAMIC 4.7MF B
C436	1-135-593-21	CAP, ELECT 150MF
C437	1-107-826-91	CAP, CHIP CERAMIC 100000PF B
C438	1-107-826-91	CAP, CHIP CERAMIC 100000PF B
C439	1-135-593-21	CAP, ELECT 150MF
C440	1-135-592-21	CAP, ELECT 100MF
C441	1-135-593-21	CAP, ELECT 150MF
C443	1-135-592-21	CAP, ELECT 100MF
C444	1-107-826-91	CAP, CHIP CERAMIC 100000PF B
C446	1-135-592-21	CAP, ELECT 100MF
C447	1-107-682-91	CAP, CERAMIC 1000000PF B 3216
C450	1-107-826-91	CAP, CHIP CERAMIC 100000PF B
C457	1-124-779-21	CAP, ELECT 10MF
C466	1-107-826-91	CAP, CHIP CERAMIC 100000PF B
C468	1-126-209-21	CAP, ELECT 100MF
C477	1-124-779-21	CAP, ELECT 10MF

Reproduction Prohibited

Ref.	Part No.	Description
C490	1-126-209-21	CAP, ELECT 100MF
C491	1-117-681-21	CAP, ELECT 100MF
C492	1-107-826-91	CAP, CHIP CERAMIC 100000PF B
C494	1-125-777-81	CAP, CHIP CERAMIC 0.1MF B (1005)
C495	1-107-826-91	CAP, CHIP CERAMIC 100000PF B
C496	1-125-837-91	CAP, CHIP CERAMIC 1MF B (1608)
C500	1-117-720-91	CAP, CERAMIC 4.7MF F (2012)
C501	1-117-720-91	CAP, CERAMIC 4.7MF F (2012)
C503	1-107-725-91	CAP, CERAMIC 100000PF B (2012)
C504	1-117-720-91	CAP, CERAMIC 4.7MF F (2012)
C505	1-113-619-91	CAP, CERAMIC 470000PF F(1608)**for GH006-21**
C506	1-107-826-91	CAP, CHIP CERAMIC 100000PF B
C508	1-113-619-91	CAP, CERAMIC 470000PF F (1608)
C509	1-113-619-91	CAP, CERAMIC 470000PF F (1608)
C510	1-113-619-91	CAP, CERAMIC 470000PF F (1608)
C511	1-162-964-91	CAP,CHIP CERAMIC 1000PF B (1608)
C512	1-113-619-91	CAP, CERAMIC 470000PF F(1608)**for GH006-21**
C513	1-113-619-91	CAP, CERAMIC 470000PF F (1608)
C514	1-113-619-91	CAP, CERAMIC 470000PF F (1608)
C516	1-113-619-91	CAP, CERAMIC 470000PF F (1608)
C517	1-113-619-91	CAP, CERAMIC 470000PF F (1608)
C518	1-113-619-91	CAP, CERAMIC 470000PF F (1608)
C520	1-164-874-81	CAP,CHIP CERAMIC 100PF CH (1005)
C521	1-125-837-91	CAP, CHIP CERAMIC 1MF B (1608)
C522	1-164-156-91	CAP, CHIP CERAMIC 0.1MF F (1608)
C523	1-107-726-91	CAP,CHIP CERAMIC 10000PF B(1608)
C524	1-113-619-91	CAP, CERAMIC 470000PF F (1608)
C525	1-113-619-91	CAP, CERAMIC 470000PF F (1608)
C526	1-164-156-91	CAP,CHIP CERAMIC 0.1MF F(1608)**for GH006-21**
C527	1-162-964-91	CAP,CHIP CERAMIC 1000PF B (1608)
C528	1-125-837-91	CAP, CHIP CERAMIC 1MF B (1608)
C529	1-128-008-21	CAP, ELECT (CHIP) 3.3MF
C530	1-128-008-21	CAP, ELECT (CHIP) 3.3MF
C532	1-164-874-81	CAP,CHIP CERAMIC 100PF CH (1005)
C533	1-113-619-91	CAP, CERAMIC 470000PF F (1608)
C534	1-113-619-91	CAP, CERAMIC 470000PF F (1608)
C535	1-113-619-91	CAP, CERAMIC 470000PF F (1608)
C536	1-113-619-91	CAP, CERAMIC 470000PF F (1608)
C537	1-113-619-91	CAP, CERAMIC 470000PF F (1608)
C538	1-113-619-91	CAP, CERAMIC 470000PF F (1608)
C539	1-113-619-91	CAP, CERAMIC 470000PF F (1608)
C540	1-113-619-91	CAP, CERAMIC 470000PF F (1608)
C541	1-113-619-91	CAP, CERAMIC 470000PF F (1608)
C542	1-164-874-81	CAP,CHIP CERAMIC 100PF CH (1005)
C543	1-113-619-91	CAP, CERAMIC 470000PF F(1608)**for GH006-11**
C601	1-164-156-91	CAP, CHIP CERAMIC 0.1MF F (1608)
C603	1-164-937-81	CAP, CHIPCERAMIC 1000PF B (1005)
C605	1-164-937-81	CAP, CHIPCERAMIC 1000PF B (1005)
C606	1-162-964-91	CAP,CHIP CERAMIC 1000PF B (1608)
C607	1-162-968-91	CAP,CHIP CERAMIC 4700PF B (1608)
C609	1-107-826-91	CAP, CHIP CERAMIC 100000PF B
C623	1-164-156-91	CAP, CHIP CERAMIC 0.1MF F (1608)
C624	1-107-826-91	CAP, CHIP CERAMIC 100000PF B
C625	1-164-156-91	CAP, CHIP CERAMIC 0.1MF F (1608)
C627	1-162-966-91	CAP, CERAMIC 2200PF B (1608)
C628	1-162-966-91	CAP, CERAMIC 2200PF B (1608)
C629	1-164-156-91	CAP, CHIP CERAMIC 0.1MF F (1608)
C630	1-164-173-91	CAP,CERAMIC 3900PF B (1608)
C631	1-162-968-91	CAP,CHIP CERAMIC 4700PF B (1608)
C632	1-107-826-91	CAP, CHIP CERAMIC 100000PF B
C633	1-164-156-91	CAP, CHIP CERAMIC 0.1MF F (1608)
C634	1-164-156-91	CAP, CHIP CERAMIC 0.1MF F (1608)
C635	1-162-968-91	CAP,CHIP CERAMIC 4700PF B (1608)
C636	1-125-777-81	CAP, CHIP CERAMIC 0.1MF B (1005)
C637	1-164-937-81	CAP, CHIPCERAMIC 1000PF B (1005)
C638	1-164-943-81	CAP,CHIP CERAMIC 10000PF B (1005)
C639	1-164-217-91	CAP,CERAMIC 150PF CH (1608)
C640	1-135-259-91	CAP, CHIP TANTALUM ELECT 10MF
C642	1-164-156-91	CAP, CHIP CERAMIC 0.1MF F (1608)
C643	1-125-777-81	CAP, CHIP CERAMIC 0.1MF B (1005)
C644	1-164-882-81	CAP,CHIP CERAMIC 220PF CH (1005)
C645	1-165-176-91	CAP,CERAMIC 47000PF B (1608)
C646	1-164-937-81	CAP, CHIPCERAMIC 1000PF B (1005)
C647	1-117-863-91	CAP, CHIP CERAMIC0.47MF B (1608)
C648	1-107-820-81	CAP, CHIP CERAMIC 100000PF F
C649	1-164-943-81	CAP,CHIP CERAMIC 10000PF B (1005)
C650	1-164-882-81	CAP,CHIP CERAMIC 220PF CH (1005)
C651	1-164-939-81	CAP, CHIPCERAMIC 2200PF B (1005)
C652	1-125-777-81	CAP, CHIP CERAMIC 0.1MF B (1005)
C653	1-164-939-81	CAP, CHIPCERAMIC 2200PF B (1005)
C654	1-164-156-91	CAP, CHIP CERAMIC 0.1MF F (1608)
C655	1-135-259-91	CAP, CHIP TANTALUM ELECT 10MF
C656	1-107-820-81	CAP, CHIP CERAMIC 100000PF F
C657	1-164-230-91	CAP,CERAMIC 220PF CH (1608)
C658	1-164-882-81	CAP,CHIP CERAMIC 220PF CH (1005)
C660	1-125-777-81	CAP, CHIP CERAMIC 0.1MF B (1005)
C661	1-107-820-81	CAP, CHIP CERAMIC 100000PF F
C662	1-164-156-91	CAP, CHIP CERAMIC 0.1MF F (1608)
C663	1-164-156-91	CAP, CHIP CERAMIC 0.1MF F (1608)
C664	1-135-259-91	CAP, CHIP TANTALUM ELECT 10MF
C665	1-107-820-81	CAP, CHIP CERAMIC 100000PF F
C666	1-107-820-81	CAP, CHIP CERAMIC 100000PF F
C667	1-107-820-81	CAP, CHIP CERAMIC 100000PF F
C668	1-107-826-91	CAP, CHIP CERAMIC 100000PF B
C671	1-164-156-91	CAP, CHIP CERAMIC 0.1MF F (1608)
C672	1-164-156-91	CAP, CHIP CERAMIC 0.1MF F (1608)
C673	1-164-156-91	CAP, CHIP CERAMIC 0.1MF F (1608)
C674	1-164-156-91	CAP, CHIP CERAMIC 0.1MF F (1608)
C675	1-107-820-81	CAP, CHIP CERAMIC 100000PF F
C676	1-107-820-81	CAP, CHIP CERAMIC 100000PF F
C680	1-162-964-91	CAP,CHIP CERAMIC 1000PF B (1608)
C685	1-117-863-91	CAP, CHIP CERAMIC0.47MF B (1608)
C688	1-162-964-91	CAP,CHIP CERAMIC 1000PF B (1608)
C689	1-162-968-91	CAP,CHIP CERAMIC 4700PF B (1608)
C901	1-107-826-91	CAP, CHIP CERAMIC 100000PF B
C902	1-107-826-91	CAP, CHIP CERAMIC 100000PF B
C903	1-107-826-91	CAP, CHIP CERAMIC 100000PF B
C904	1-107-826-91	CAP, CHIP CERAMIC 100000PF B
C905	1-107-826-91	CAP, CHIP CERAMIC 100000PF B
C906	1-107-826-91	CAP, CHIP CERAMIC 100000PF B
C907	1-107-826-91	CAP, CHIP CERAMIC 100000PF B
C908	1-107-826-91	CAP, CHIP CERAMIC 100000PF B
C909	1-107-826-91	CAP, CHIP CERAMIC 100000PF B
C910	1-107-826-91	CAP, CHIP CERAMIC 100000PF B
C911	1-107-826-91	CAP, CHIP CERAMIC 100000PF B
C912	1-107-826-91	CAP, CHIP CERAMIC 100000PF B
C913	1-107-826-91	CAP, CHIP CERAMIC 100000PF B
C914	1-107-826-91	CAP, CHIP CERAMIC 100000PF B
C915	1-107-826-91	CAP, CHIP CERAMIC 100000PF B
C916	1-107-826-91	CAP, CHIP CERAMIC 100000PF B
C917	1-107-826-91	CAP, CHIP CERAMIC 100000PF B
C918	1-107-826-91	CAP, CHIP CERAMIC 100000PF B
C919	1-107-826-91	CAP, CHIP CERAMIC 100000PF B
C920	1-107-826-91	CAP, CHIP CERAMIC 100000PF B
C921	1-107-826-91	CAP, CHIP CERAMIC 100000PF B
C922	1-107-826-91	CAP, CHIP CERAMIC 100000PF B
C923	1-107-826-91	CAP, CHIP CERAMIC 100000PF B
C924	1-107-826-91	CAP, CHIP CERAMIC 100000PF B
C925	1-107-826-91	CAP, CHIP CERAMIC 100000PF B
C926	1-107-826-91	CAP, CHIP CERAMIC 100000PF B
C927	1-107-826-91	CAP, CHIP CERAMIC 100000PF B
C928	1-107-826-91	CAP, CHIP CERAMIC 100000PF B
C929	1-107-826-91	CAP, CHIP CERAMIC 100000PF B
C930	1-107-826-91	CAP, CHIP CERAMIC 100000PF B
C931	1-107-826-91	CAP, CHIP CERAMIC 100000PF B
C932	1-107-826-91	CAP, CHIP CERAMIC 100000PF B
C933	1-107-826-91	CAP, CHIP CERAMIC 100000PF B
C934	1-107-826-91	CAP, CHIP CERAMIC 100000PF B
C935	1-107-826-91	CAP, CHIP CERAMIC 100000PF B
C936	1-107-826-91	CAP, CHIP CERAMIC 100000PF B
C937	1-107-826-91	CAP, CHIP CERAMIC 100000PF B
C938	1-107-826-91	CAP, CHIP CERAMIC 100000PF B
C939	1-107-826-91	CAP, CHIP CERAMIC 100000PF B
C940	1-107-826-91	CAP, CHIP CERAMIC 100000PF B
C941	1-107-826-91	CAP, CHIP CERAMIC 100000PF B
C942	1-107-826-91	CAP, CHIP CERAMIC 100000PF B
C943	1-107-826-91	CAP, CHIP CERAMIC 100000PF B
C944	1-107-826-91	CAP, CHIP CERAMIC 100000PF B
C945	1-107-826-91	CAP, CHIP CERAMIC 100000PF B
C946	1-107-826-91	CAP, CHIP CERAMIC 100000PF B
C947	1-107-826-91	CAP, CHIP CERAMIC 100000PF B
C948	1-107-826-91	CAP, CHIP CERAMIC 100000PF B
C949	1-107-826-91	CAP, CHIP CERAMIC 100000PF B
C950	1-107-826-91	CAP, CHIP CERAMIC 100000PF B
C951	1-107-826-91	CAP, CHIP CERAMIC 100000PF B
C952	1-107-826-91	CAP, CHIP CERAMIC 100000PF B
C953	1-107-826-91	CAP, CHIP CERAMIC 100000PF B
C954	1-107-826-91	CAP, CHIP CERAMIC 100000PF B
C955	1-107-826-91	CAP, CHIP CERAMIC 100000PF B
C956	1-107-826-91	CAP, CHIP CERAMIC 100000PF B
C957	1-107-826-91	CAP, CHIP CERAMIC 100000PF B
C958	1-107-826-91	CAP, CHIP CERAMIC 100000PF B
C959	1-107-826-91	CAP, CHIP CERAMIC 100000PF B
C960	1-107-826-91	CAP, CHIP CERAMIC 100000PF B
C961	1-107-826-91	CAP, CHIP CERAMIC 100000PF B
C962	1-107-826-91	CAP, CHIP CERAMIC 100000PF B
C963	1-107-826-91	CAP, CHIP CERAMIC 100000PF B
C965	1-107-826-91	CAP, CHIP CERAMIC 100000PF B
C966	1-107-826-91	CAP, CHIP CERAMIC 100000PF B
C967	1-125-837-91	CAP, CHIP CERAMIC 1MF B (1608)
C968	1-125-837-91	CAP, CHIP CERAMIC 1MF B (1608)
C980	1-107-826-91	CAP, CHIP CERAMIC 100000PF B
C981	1-107-826-91	CAP, CHIP CERAMIC 100000PF B
C982	1-107-826-91	CAP, CHIP CERAMIC 100000PF B
C983	1-107-826-91	CAP, CHIP CERAMIC 100000PF B
C984	1-107-826-91	CAP, CHIP CERAMIC 100000PF B
C985	1-107-826-91	CAP, CHIP CERAMIC 100000PF B
C986	1-107-826-91	CAP, CHIP CERAMIC 100000PF B
C987	1-107-826-91	CAP, CHIP CERAMIC 100000PF B
C988	1-107-826-91	CAP, CHIP CERAMIC 100000PF B
C989	1-107-826-91	CAP, CHIP CERAMIC 100000PF B
C990	1-125-837-91	CAP, CHIP CERAMIC 1MF B (1608)
		<CONNECTOR>
CN201	1-794-209-11	CONNECTOR, SQUARE TYPE 12P
CN301	1-794-208-11	CONNECTOR, SQUARE TYPE 4P
CN302	1-794-206-21	CONNECTOR, FFC/FPC (ZIF) 36P
CN303	1-794-207-11	CONNECTOR, USB 8P
CN403	1-770-619-21	PIN, CONNECTOR 2P
CN406	1-815-226-21	CONNECTOR, FFC/FPC (ZIF) 40P
CN407	1-815-301-11	PIN, CONNECTOR 4P
CN408	1-815-302-11	PIN, CONNECTOR (PLUG) 34P
CN501	1-418-965-11	TRANSMITTER UNIT, LIGHT
CN504	1-815-190-21	CONNECTOR BOARD TO BOARD 110P
CN604	1-793-823-21	CONNECTOR, FFC/FPC (ZIF) 54P
		<NETWORK>
CP201	1-234-605-21	NETWORK, RC
		<DIODE>
D201	8-719-065-78	DIODE MAZF12000LS0
D202	8-719-064-61	DIODE 01BZA8.2(TE85L)
D203	8-719-064-61	DIODE 01BZA8.2(TE85L)
D204	8-719-064-61	DIODE 01BZA8.2(TE85L)
D205	8-719-064-61	DIODE 01BZA8.2(TE85L)
D206	8-719-064-61	DIODE 01BZA8.2(TE85L)
D208	8-719-064-61	DIODE 01BZA8.2(TE85L)
D209	8-719-064-61	DIODE 01BZA8.2(TE85L)
D210	8-719-064-61	DIODE 01BZA8.2(TE85L)
D301	8-719-071-87	DIODE MA785-(TX),SO
D302	8-719-071-87	DIODE MA785-(TX),SO
D402	8-719-074-34	DIODE RB495D-T146
D403	8-719-074-34	DIODE RB495D-T146
D405	8-719-078-04	DIODE EC31QS03L-TE12L
D500	8-719-941-21	DIODE DAP202UT106
D501	8-719-082-76	DIODE CL-200TLY-C-TV
		<FUSE>
⚠ F001	1-576-434-21	FUSE, CHIP
⚠ F002	1-576-434-21	FUSE, CHIP
		<FERRITE BEAD>
FB102	1-469-667-21	FERRITE, EMI (SMD)
FB103	1-469-667-21	FERRITE, EMI (SMD)
FB201	1-414-813-21	FERRITE, EMI (SMD)
FB202	1-500-113-22	BEAD, FERRITE (CHIP)
FB203	1-500-113-22	BEAD, FERRITE (CHIP)
FB204	1-500-113-22	BEAD, FERRITE (CHIP)
FB205	1-500-113-22	BEAD, FERRITE (CHIP)
FB206	1-500-113-22	BEAD, FERRITE (CHIP)
FB303	1-414-555-21	FERRITE, EMI (SMD)
FB304	1-414-555-21	FERRITE, EMI (SMD)
FB305	1-414-555-21	FERRITE, EMI (SMD)
FB306	1-414-555-21	FERRITE, EMI (SMD)
FB307	1-414-555-21	FERRITE, EMI (SMD)
FB308	1-414-555-21	FERRITE, EMI (SMD)
FB309	1-414-555-21	FERRITE, EMI (SMD)
FB310	1-414-555-21	FERRITE, EMI (SMD)
FB311	1-414-555-21	FERRITE, EMI (SMD)
FB312	1-414-555-21	FERRITE, EMI (SMD)
FB313	1-469-324-21	FERRITE, EMI (SMD)
FB314	1-469-324-21	FERRITE, EMI (SMD)
FB315	1-469-324-21	FERRITE, EMI (SMD)
FB316	1-469-324-21	FERRITE, EMI (SMD)
		<FILTER>
FL201	1-469-642-21	FILTER, EMI (SMD) (2125)
FL202	1-469-642-21	FILTER, EMI (SMD) (2125)
FL203	1-469-642-21	FILTER, EMI (SMD) (2125)
FL301	1-234-601-21	NETWORK, RC (USB) (3216)
FL302	1-234-601-21	NETWORK, RC (USB) (3216)
		<IC>
IC101	8-759-831-20	IC CY2212ZC-2T
IC102	8-759-666-89	IC TC59RM716GB-8(YEL
IC103	8-759-666-89	IC TC59RM716GB-8(YEL
IC104	8-759-699-09	IC CXD9615GB
IC105	8-759-689-90	IC LM74CIMX-3
IC202	8-759-699-08	IC CXD2944GB
IC205	8-759-696-97	IC SC44728APBEB
IC206	8-752-093-56	IC CXA3525R-T4

Reproduction Prohibited

Ref.	Part No.	Description	
IC207	8-759-391-69	IC MC78M05CDTRK	
IC208	8-759-683-81	IC SN74CBT1G125DCKR	
IC209	8-759-697-60	IC MM3071CFBE	
IC303	8-759-699-11	IC CXD9619GB	
IC305	8-759-496-87	IC T7X16(YEL)	
IC306	8-759-688-07	IC MM3051NULE	
IC403	8-759-581-11	IC NJM2125F(TE2)	
IC404	8-759-689-89	IC SN104809DBTR	
IC408	8-759-712-65	IC PQ070XZ01ZP	
IC410	8-749-018-42	IC SI-3026LSA-TL	
IC501	8-759-699-10	IC CXD9611R	
IC502	8-759-712-79	IC K4E151612D-TL50T00	
IC503	8-759-824-92	IC MR27V3202E-23TPZ020	**for GH006-21**
IC504	8-752-408-53	IC CXD2942AR	
IC505	8-759-830-44	IC TC5364200FT-UC120	**for GH006-11**
IC506	8-759-824-91	IC MR27V3202E-24TPZ020	**for GH006-21**
IC517	8-759-667-10	IC CS4335-KS	
IC518	8-759-680-49	IC TC7WB125FK(TE85R)	**for GH006-11**
IC603	8-759-370-11	IC NJM2100V-TE2	
IC604	8-752-919-93	IC CXP102064-101R-T6	
IC605	8-752-409-02	IC CXD1869AQ	
IC606	8-759-712-38	IC HD74HC1G66CME	
		<INDUCTOR>	
L102	1-414-398-41	INDUCTOR (SMD) 10.0UH	
L203	1-469-967-21	INDUCTOR, CHIP 10UH	(2518)
L205	1-469-967-21	INDUCTOR, CHIP 10UH	(2518)
L206	1-412-960-21	INDUCTOR, SMALL TYPE 56UH 2518	
L401	1-419-901-21	COIL, CHOKE (SMD) 10UH	
L402	1-419-901-21	COIL, CHOKE (SMD) 10UH	
L403	1-419-903-21	COIL (SMD), CHOKE 4.2UH	
L404	1-419-905-21	COIL, CHOKE (SMD) 1.82UH	
		<COIL>	
LF101	1-419-100-21	COIL, COMMON-MODE CHOKE	
LF303	1-419-521-21	COIL, COMMOM MODE CHOKE	
LF304	1-419-521-21	COIL, COMMOM MODE CHOKE	
LF305	1-419-521-21	COIL, COMMOM MODE CHOKE	
LF306	1-419-521-21	COIL, COMMOM MODE CHOKE	
		<LINK>	
⚠ PS001	1-533-940-21	RINK, CHIP IC	
⚠ PS002	1-533-940-21	RINK, CHIP IC	
⚠ PS003	1-533-915-41	RINK, CHIP IC	
⚠ PS004	1-533-674-21	RINK, CHIP IC	
⚠ PS005	1-533-940-21	RINK, CHIP IC	
		<TRANSISTOR>	
Q201	8-729-026-50	TRANSISTOR 2SA1037AK-T146-QR	
Q204	8-729-049-77	TRANSISTOR HN1B01F-GR(T5LSONY)	
Q205	8-729-427-71	TRANSISTOR XP4401-TXE	
Q401	8-729-051-63	TRANSISTOR SI4884DY-T1	
Q402	8-729-053-79	TRANSISTOR IRF7901D1-TR	
Q404	8-729-051-62	TRANSISTOR IRF7809A-TR	
Q407	8-729-052-41	TRANSISTOR 2SC4541 (2TL SONY1)	
Q408	8-729-054-34	TRANSISTOR FDN304P	
Q505	8-729-021-09	TRANSISTOR RN4904(TE85R)	
Q506	8-729-047-71	TRANSISTOR FMG12-T-148	
Q600	8-729-048-50	TRANSISTOR 2SK3018-T106	
Q603	8-729-017-33	TRANSISTOR RN1706-TE85R	
		<RESISTOR>	
R101	1-211-983-91	RES, CHIP 39	(1608)
R102	1-218-826-91	RES, CHIP 130	(1608)
R103	1-211-983-91	RES, CHIP 39	(1608)
R104	1-218-826-91	RES, CHIP 130	(1608)
R105	1-216-864-91	CONDUCTOR, CHIP	(1608)
R106	1-216-809-91	RES, CHIP 100	(1608)
R107	1-216-809-91	RES, CHIP 100	(1608)
R109	1-216-829-91	RES, CHIP 4.7K	(1608)
R110	1-211-983-91	RES, CHIP 39	(1608)
R111	1-211-983-91	RES, CHIP 39	(1608)
R112	1-211-989-91	RES, CHIP 68	(1608)
R113	1-211-989-91	RES, CHIP 68	(1608)
R114	1-211-983-91	RES, CHIP 39	(1608)
R115	1-211-983-91	RES, CHIP 39	(1608)
R116	1-211-983-91	RES, CHIP 39	(1608)
R117	1-211-983-91	RES, CHIP 39	(1608)
R118	1-211-973-91	RES, CHIP 15	(1608)
R119	1-211-973-91	RES, CHIP 15	(1608)
R120	1-211-973-91	RES, CHIP 15	(1608)
R121	1-211-973-91	RES, CHIP 15	(1608)
R122	1-216-864-91	CONDUCTOR, CHIP	(1608)
R123	1-216-864-91	CONDUCTOR, CHIP	(1608)
R124	1-216-864-91	CONDUCTOR, CHIP	(1608)
R125	1-216-864-91	CONDUCTOR, CHIP	(1608)
R126	1-216-833-91	RES, CHIP 10K	(1608)
R127	1-216-829-91	RES, CHIP 4.7K	(1608)
R128	1-216-829-91	RES, CHIP 4.7K	(1608)
R129	1-216-821-91	RES, CHIP 1.0K	(1608)
R130	1-216-817-91	RES, CHIP 470	(1608)
R131	1-216-833-91	RES, CHIP 10K	(1608)
R132	1-216-833-91	RES, CHIP 10K	(1608)
R133	1-216-833-91	RES, CHIP 10K	(1608)
R134	1-216-833-91	RES, CHIP 10K	(1608)
R135	1-216-864-91	CONDUCTOR, CHIP	(1608)
R136	1-216-864-91	CONDUCTOR, CHIP	(1608)
R138	1-216-864-91	CONDUCTOR, CHIP	(1608)
R139	1-216-801-91	RES, CHIP 22	(1608)
R145	1-216-821-91	RES, CHIP 1.0K	(1608)
R146	1-216-821-91	RES, CHIP 1.0K	(1608)
R147	1-216-821-91	RES, CHIP 1.0K	(1608)
R185	1-216-829-91	RES, CHIP 4.7K	(1608)
R188	1-216-829-91	RES, CHIP 4.7K	(1608)
R196	1-216-801-91	RES, CHIP 22	(1608)
R202	1-216-833-91	RES, CHIP 10K	(1608)
R203	1-216-864-91	CONDUCTOR, CHIP	(1608)
R205	1-216-864-91	CONDUCTOR, CHIP	(1608)
R208	1-216-864-91	CONDUCTOR, CHIP	(1608)
R212	1-216-864-91	CONDUCTOR, CHIP	(1608)
R213	1-216-864-91	CONDUCTOR, CHIP	(1608)
R215	1-216-864-91	CONDUCTOR, CHIP	(1608)
R216	1-216-809-91	RES, CHIP 100	(1608)
R217	1-218-859-91	RES, CHIP 3.3K	(1608)
R218	1-218-847-91	RES, CHIP 1.0K	(1608)
R219	1-218-851-91	RES, CHIP 1.5K	(1608)
R220	1-216-801-91	RES, CHIP 22	(1608)
R225	1-216-833-91	RES, CHIP 10K	(1608)
R226	1-218-965-81	RES, CHIP 10K	
R227	1-216-864-91	CONDUCTOR, CHIP	(1608)
R228	1-218-965-81	RES, CHIP 10K	
R233	1-216-821-91	RES, CHIP 1.0K	(1608)
R236	1-216-809-91	RES, CHIP 100	(1608)
R237	1-216-829-91	RES, CHIP 4.7K	(1608)
R244	1-218-831-91	RES, CHIP 220	(1608)
R245	1-218-831-91	RES, CHIP 220	(1608)
R246	1-218-831-91	RES, CHIP 220	(1608)
R247	1-216-801-91	RES, CHIP 22	(1608)
R251	1-216-837-91	RES, CHIP 22K	(1608)
R252	1-216-839-91	RES, CHIP 33K	(1608)
R253	1-216-833-91	RES, CHIP 10K	(1608)
R257	1-216-824-91	RES, CHIP 1.8K	(1608)
R258	1-218-883-91	RES, CHIP 33K	(1608)
R259	1-216-824-91	RES, CHIP 1.8K	(1608)
R261	1-216-829-91	RES, CHIP 4.7K	(1608)
R263	1-216-825-91	RES, CHIP 2.2K	(1608)
R264	1-216-821-91	RES, CHIP 1.0K	(1608)
R265	1-216-821-91	RES, CHIP 1.0K	(1608)
R270	1-218-853-91	RES, CHIP 1.8K	(1608)
R272	1-218-859-91	RES, CHIP 3.3K	(1608)
R273	1-218-851-91	RES, CHIP 1.5K	(1608)
R277	1-218-853-91	RES, CHIP 1.8K	(1608)
R278	1-218-859-91	RES, CHIP 3.3K	(1608)
R279	1-218-851-91	RES, CHIP 1.5K	(1608)
R292	1-216-833-91	RES, CHIP 10K	(1608)
R294	1-216-829-91	RES, CHIP 4.7K	(1608)
R295	1-216-817-91	RES, CHIP 470	(1608)
R307	1-211-987-91	RES, CHIP 56	(1608)
R308	1-218-864-91	RES, CHIP 5.1K	(1608)
R309	1-211-987-91	RES, CHIP 56	(1608)
R310	1-211-987-91	RES, CHIP 56	(1608)
R311	1-216-829-91	RES, CHIP 4.7K	(1608)
R312	1-211-987-91	RES, CHIP 56	(1608)
R315	1-218-866-91	RES, CHIP 6.2K	(1608)
R316	1-216-797-91	RES, CHIP 10	(1608)
R318	1-216-864-91	CONDUCTOR, CHIP	(1608)
R320	1-219-570-91	RES, CHIP 10M	(1608)
R321	1-216-813-91	RES, CHIP 220	(1608)
R322	1-218-989-81	RES, CHIP 1M	
R324	1-218-965-81	RES, CHIP 10K	
R327	1-216-833-91	RES, CHIP 10K	(1608)
R328	1-216-841-91	RES, CHIP 47K	(1608)
R330	1-216-803-91	RES, CHIP 33	(1608)
R331	1-216-864-91	CONDUCTOR, CHIP	(1608)
R332	1-216-817-91	RES, CHIP 470	(1608)
R333	1-216-817-91	RES, CHIP 470	(1608)
R334	1-216-829-91	RES, CHIP 4.7K	(1608)
R335	1-216-829-91	RES, CHIP 4.7K	(1608)
R336	1-216-821-91	RES, CHIP 1.0K	(1608)
R347	1-211-986-91	RES, CHIP 51	(1608)
R349	1-216-821-91	RES, CHIP 1.0K	(1608)
R350	1-216-807-91	RES, CHIP 68	(1608)
R351	1-216-805-91	RES, CHIP 47	(1608)
R352	1-216-797-91	RES, CHIP 10	(1608)
R355	1-218-933-81	RES, CHIP 22	
R356	1-216-801-91	RES, CHIP 22	(1608)
R357	1-218-933-81	RES, CHIP 22	
R358	1-218-933-81	RES, CHIP 22	
R359	1-216-801-91	RES, CHIP 22	(1608)
R360	1-216-805-91	RES, CHIP 47	(1608)
R361	1-216-805-91	RES, CHIP 47	(1608)
R362	1-218-937-81	RES, CHIP 47	
R363	1-216-864-91	CONDUCTOR, CHIP	(1608)
R364	1-216-805-91	RES, CHIP 47	(1608)
R365	1-216-805-91	RES, CHIP 47	(1608)
R366	1-218-937-81	RES, CHIP 47	
R367	1-216-805-91	RES, CHIP 47	(1608)
R368	1-216-805-91	RES, CHIP 47	(1608)
R394	1-216-833-91	RES, CHIP 10K	(1608)
R395	1-216-825-91	RES, CHIP 2.2K	(1608)
R401	1-216-857-91	RES, CHIP 1.0M	(1608)
R402	1-216-845-91	RES, CHIP 100K	(1608)
R406	1-216-811-91	RES, CHIP 150	(1608)
R407	1-216-811-91	RES, CHIP 150	(1608)
R409	1-218-835-91	RES, CHIP 330	(1608)
R410	1-218-883-91	RES, CHIP 33K	(1608)
R411	1-218-883-91	RES, CHIP 33K	(1608)
R412	1-218-883-91	RES, CHIP 33K	(1608)
R413	1-218-883-91	RES, CHIP 33K	(1608)
R414	1-218-835-91	RES, CHIP 330	(1608)
R417	1-216-813-91	RES, CHIP 220	(1608)
R418	1-216-817-91	RES, CHIP 470	(1608)
R421	1-216-790-91	RES, CHIP 2.7	(1608)
R422	1-216-797-91	RES, CHIP 10	(1608)
R423	1-216-790-91	RES, CHIP 2.7	(1608)
R424	1-216-797-91	RES, CHIP 10	(1608)
R425	1-218-985-81	RES, CHIP 470K	
R426	1-218-879-91	RES, CHIP 22K	(1608)
R427	1-218-875-91	RES, CHIP 15K	(1608)
R428	1-216-309-91	RES, CHIP 5.6	(2012)
R430	1-216-813-91	RES, CHIP 220	(1608)
R433	1-216-826-91	RES, CHIP 2.7K	(1608)
R438	1-218-850-91	RES, CHIP 1.3K	(1608)
R439	1-218-857-91	RES, CHIP 2.7K	(1608)
R448	1-216-829-91	RES, CHIP 4.7K	(1608)
R451	1-216-813-91	RES, CHIP 220	(1608)
R470	1-216-837-91	RES, CHIP 22K	(1608)
R471	1-218-985-81	RES, CHIP 470K	
R472	1-218-871-91	RES, CHIP 10K	(1608)
R473	1-218-863-91	RES, CHIP 4.7K	(1608)
R474	1-216-827-91	RES, CHIP 3.3K	(1608)
R475	1-216-822-91	RES, CHIP 1.2K	(1608)
R476	1-216-813-91	RES, CHIP 220	(1608)
R477	1-216-816-91	RES, CHIP 390	(1608)
R478	1-216-813-91	RES, CHIP 220	(1608)
R479	1-216-816-91	RES, CHIP 390	(1608)
R498	1-216-864-91	CONDUCTOR, CHIP	(1608)
R503	1-216-803-91	RES, CHIP 33	(1608)
R504	1-216-803-91	RES, CHIP 33	(1608)
R505	1-216-803-91	RES, CHIP 33	(1608)
R506	1-216-809-91	RES, CHIP 100	(1608)
R507	1-218-937-81	RES, CHIP 47	
R509	1-216-821-91	RES, CHIP 1.0K	(1608)
R511	1-216-806-91	RES, CHIP 56	(1608)
R513	1-218-937-81	RES, CHIP 47	
R514	1-216-806-91	RES, CHIP 56	(1608)
R515	1-216-806-91	RES, CHIP 56	(1608)
R516	1-218-941-81	RES, CHIP 100	
R517	1-218-941-81	RES, CHIP 100	
R520	1-216-806-91	RES, CHIP 56	(1608)
R521	1-216-806-91	RES, CHIP 56	(1608)
R522	1-216-833-91	RES, CHIP 10K	(1608)
R527	1-216-821-91	RES, CHIP 1.0K	(1608) **for GH006-11**
R531	1-216-809-91	RES, CHIP 100	(1608)
R574	1-216-812-91	RES, CHIP 180	(1608)
R601	1-216-864-91	CONDUCTOR, CHIP	(1608)
R604	1-216-845-91	RES, CHIP 100K	(1608)
R606	1-216-833-91	RES, CHIP 10K	(1608)
R607	1-218-965-81	RES, CHIP 10K	
R613	1-216-833-91	RES, CHIP 10K	(1608)
R614	1-218-965-81	RES, CHIP 10K	
R615	1-216-864-91	CONDUCTOR, CHIP	(1608)
R616	1-216-864-91	CONDUCTOR, CHIP	(1608)
R619	1-216-833-91	RES, CHIP 10K	(1608)
R620	1-216-833-91	RES, CHIP 10K	(1608)
R623	1-216-837-91	RES, CHIP 22K	(1608)
R624	1-216-850-91	RES, CHIP 270K	(1608)
R625	1-216-839-91	RES, CHIP 33K	(1608)
R626	1-218-965-81	RES, CHIP 10K	
R627	1-216-835-91	RES, CHIP 15K	(1608)
R630	1-216-837-91	RES, CHIP 22K	(1608)
R631	1-216-821-91	RES, CHIP 1.0K	(1608)
R632	1-216-821-91	RES, CHIP 1.0K	(1608)
R633	1-216-821-91	RES, CHIP 1.0K	(1608)
R634	1-216-821-91	RES, CHIP 1.0K	(1608)

Reproduction Prohibited

Ref.	Part No.	Description	
R636	1-216-864-91	CONDUCTOR, CHIP	(1608)
R640	1-216-837-91	RES, CHIP 22K	(1608)
R642	1-218-965-81	RES, CHIP 10K	
R643	1-216-850-91	RES, CHIP 270K	(1608)
R644	1-216-837-91	RES, CHIP 22K	(1608)
R649	1-216-833-91	RES, CHIP 10K	(1608)
R650	1-218-965-81	RES, CHIP 10K	
R651	1-216-835-91	RES, CHIP 15K	(1608)
R653	1-216-845-91	RES, CHIP 100K	(1608)
R654	1-218-977-81	RES, CHIP 100K	
R657	1-218-971-81	RES, CHIP 33K	
R658	1-218-965-81	RES, CHIP 10K	
R660	1-216-833-91	RES, CHIP 10K	(1608)
R661	1-216-833-91	RES, CHIP 10K	(1608)
R662	1-216-864-91	CONDUCTOR, CHIP	(1608)
R667	1-216-861-91	RES, CHIP 2.2M	(1608)
R668	1-218-985-81	RES, CHIP 470K	
R669	1-218-977-81	RES, CHIP 100K	
R670	1-218-965-81	RES, CHIP 10K	
R671	1-218-959-81	RES, CHIP 3.3K	
R672	1-218-888-91	RES, CHIP 51K	(1608)
R673	1-218-959-81	RES, CHIP 3.3K	
R674	1-218-977-81	RES, CHIP 100K	
R675	1-218-971-81	RES, CHIP 33K	
R678	1-216-829-91	RES, CHIP 4.7K	(1608)
R689	1-218-977-81	RES, CHIP 100K	
R694	1-216-835-91	RES, CHIP 15K	(1608)
R696	1-216-846-91	RES, CHIP 120K	(1608)
R698	1-216-835-91	RES, CHIP 15K	(1608)
R699	1-216-833-91	RES, CHIP 10K	(1608)
R901	1-216-805-91	RES, CHIP 47	(1608)
R902	1-216-805-91	RES, CHIP 47	(1608)
R974	1-216-801-91	RES, CHIP 22	(1608)
R975	1-216-801-91	RES, CHIP 22	(1608)
R984	1-216-864-91	CONDUCTOR, CHIP	(1608)
RB101	1-234-496-21	ARRAY, RESISTOR 39	
RB102	1-234-496-21	ARRAY, RESISTOR 39	
RB103	1-234-496-21	ARRAY, RESISTOR 39	
RB104	1-234-496-21	ARRAY, RESISTOR 39	
RB105	1-234-496-21	ARRAY, RESISTOR 39	
RB106	1-234-496-21	ARRAY, RESISTOR 39	
RB107	1-233-423-21	RES, CHIP NETWORK 47 (3216)	
RB108	1-233-423-21	RES, CHIP NETWORK 47 (3216)	
RB109	1-233-423-21	RES, CHIP NETWORK 47 (3216)	
RB110	1-233-423-21	RES, CHIP NETWORK 47 (3216)	
RB111	1-233-423-21	RES, CHIP NETWORK 47 (3216)	
RB112	1-233-423-21	RES, CHIP NETWORK 47 (3216)	
RB113	1-233-423-21	RES, CHIP NETWORK 47 (3216)	
RB114	1-233-423-21	RES, CHIP NETWORK 47 (3216)	
RB115	1-233-423-21	RES, CHIP NETWORK 47 (3216)	
RB116	1-233-423-21	RES, CHIP NETWORK 47 (3216)	
RB117	1-233-423-21	RES, CHIP NETWORK 47 (3216)	
RB118	1-233-423-21	RES, CHIP NETWORK 47 (3216)	
RB119	1-233-423-21	RES, CHIP NETWORK 47 (3216)	
RB120	1-233-423-21	RES, CHIP NETWORK 47 (3216)	
RB121	1-233-423-21	RES, CHIP NETWORK 47 (3216)	
RB122	1-233-423-21	RES, CHIP NETWORK 47 (3216)	
RB123	1-233-423-21	RES, CHIP NETWORK 47 (3216)	
RB124	1-233-423-21	RES, CHIP NETWORK 47 (3216)	
RB125	1-233-423-21	RES, CHIP NETWORK 47 (3216)	
RB126	1-233-423-21	RES, CHIP NETWORK 47 (3216)	
RB130	1-233-423-21	RES, CHIP NETWORK 47 (3216)	
RB131	1-233-423-21	RES, CHIP NETWORK 47 (3216)	
RB132	1-233-423-21	RES, CHIP NETWORK 47 (3216)	
RB133	1-233-423-21	RES, CHIP NETWORK 47 (3216)	
RB134	1-233-423-21	RES, CHIP NETWORK 47 (3216)	
RB135	1-233-423-21	RES, CHIP NETWORK 47 (3216)	
RB136	1-233-423-21	RES, CHIP NETWORK 47 (3216)	
RB137	1-233-423-21	RES, CHIP NETWORK 47 (3216)	
RB139	1-233-414-21	RES, CHIP NETWORK 4.7K (3216)	
RB241	1-233-414-21	RES, CHIP NETWORK 4.7K (3216)	
RB294	1-233-414-21	RES, CHIP NETWORK 4.7K (3216)	
RB295	1-233-412-21	RES, CHIP NETWORK 1.0K (3216)	
RB296	1-234-598-21	RES, CHIP NETWORK 75X4 (3216)	
RB297	1-234-599-21	RES, CHIP NETWORK 180X4 (3216)	
RB298	1-234-598-21	RES, CHIP NETWORK 75X4 (3216)	
RB303	1-233-412-21	RES, CHIP NETWORK 1.0K (3216)	
RB305	1-233-575-21	RES, CHIP NETWORK 22	
RB310	1-233-414-21	RES, CHIP NETWORK 4.7K (3216)	
RB311	1-233-679-91	RES, NETWORK (1608) 470	
RB312	1-233-786-91	RES, NETWORK 220	(1608)
RB314	1-233-681-91	RES, NETWORK (1608) 4.7K	
RB317	1-233-423-21	RES, CHIP NETWORK 47 (3216)	
RB318	1-233-423-21	RES, CHIP NETWORK 47 (3216)	
RB319	1-233-423-21	RES, CHIP NETWORK 47 (3216)	
RB320	1-233-423-21	RES, CHIP NETWORK 47 (3216)	
RB321	1-233-423-21	RES, CHIP NETWORK 47 (3216)	
RB322	1-233-412-21	RES, CHIP NETWORK 1.0K (3216)	
RB323	1-233-412-21	RES, CHIP NETWORK 1.0K (3216)	
RB324	1-233-412-21	RES, CHIP NETWORK 1.0K (3216)	
RB325	1-233-412-21	RES, CHIP NETWORK 1.0K (3216)	
RB326	1-233-412-21	RES, CHIP NETWORK 1.0K (3216)	
RB327	1-233-415-21	RES, CHIP NETWORK 10K (3216)	
RB328	1-233-414-21	RES, CHIP NETWORK 4.7K (3216)	
RB329	1-233-783-91	RES, NETWORK 22	(1608)
RB402	1-233-803-91	RES, NETWORK 1.5K	(1608)
RB511	1-233-423-21	RES, CHIP NETWORK 47 (3216)	
RB512	1-234-610-21	RES, CHIP NETWORK 270K (3216)	
RB514	1-233-576-21	RES, CHIP NETWORK 100	
RB515	1-234-611-21	RES, CHIP NETWORK 560 (3216)	
RB516	1-233-415-21	RES, CHIP NETWORK 10K (3216)	
RB517	1-233-575-21	RES, CHIP NETWORK 22	
RB518	1-233-575-21	RES, CHIP NETWORK 22	
RB519	1-233-575-21	RES, CHIP NETWORK 22	
RB520	1-233-575-21	RES, CHIP NETWORK 22	
RB521	1-233-575-21	RES, CHIP NETWORK 22	
RB522	1-233-575-21	RES, CHIP NETWORK 22	
RB523	1-233-575-21	RES, CHIP NETWORK 22	
RB524	1-233-575-21	RES, CHIP NETWORK 22	
RB525	1-233-575-21	RES, CHIP NETWORK 22	
RB526	1-233-575-21	RES, CHIP NETWORK 22	
RB527	1-233-575-21	RES, CHIP NETWORK 22	
RB528	1-233-575-21	RES, CHIP NETWORK 22	
RB529	1-233-575-21	RES, CHIP NETWORK 22	
RB530	1-233-575-21	RES, CHIP NETWORK 22	
RB531	1-233-575-21	RES, CHIP NETWORK 22	
RB532	1-233-575-21	RES, CHIP NETWORK 22	
RB602	1-233-415-21	RES, CHIP NETWORK 10K (3216)	
RB603	1-233-415-21	RES, CHIP NETWORK 10K (3216)	
RB606	1-233-412-21	RES, CHIP NETWORK 1.0K (3216)	
RB607	1-233-415-21	RES, CHIP NETWORK 10K (3216)	
RB609	1-233-423-21	RES, CHIP NETWORK 47 (3216)	
RB611	1-233-415-21	RES, CHIP NETWORK 10K (3216)	
		<CRYSTAL>	
X101	1-781-640-21	VIBRATOR, CRYSTAL	
X202	1-781-857-21	OSCILLATOR, CRYSTAL	
X301	1-781-856-21	VIBRATOR, CRYSTAL	
X302	1-781-768-21	VIBRATOR, CRYSTAL	

****

Ref.	Part No.	Description	
	A-6712-832-A	**MOUNTED CIRCUIT BOARD, GD-013-11**	
		**********	
		PLACE CODE #25GD	
		<BATTERY>	
BT401	1-756-076-21	HOLDER, LITHIUM BATTERY	
		<CAPACITOR>	
C119	1-162-927-91	CAP, CERAMIC 100PF CH	(1608)
C120	1-162-927-91	CAP, CERAMIC 100PF CH	(1608)
C121	1-162-927-91	CAP, CERAMIC 100PF CH	(1608)
C122	1-162-927-91	CAP, CERAMIC 100PF CH	(1608)
C123	1-162-927-91	CAP, CERAMIC 100PF CH	(1608)
C124	1-162-927-91	CAP, CERAMIC 100PF CH	(1608)
C401	1-107-826-91	CAP, CHIP CERAMIC 100000PF B	
C402	1-164-505-91	CAP, CHIP CERAMIC 2.2MF F	(2012)
C403	1-162-964-91	CAP,CHIP CERAMIC 1000PF B	(1608)
C405	1-107-826-91	CAP, CHIP CERAMIC 100000PF B	
C407	1-107-826-91	CAP, CHIP CERAMIC 100000PF B	
C408	1-125-837-91	CAP, CHIP CERAMIC 1MF B	(1608)
C425	1-128-995-21	CAP, ELECT 100MF	
C426	1-107-826-91	CAP, CHIP CERAMIC 100000PF B	
C434	1-162-964-91	CAP,CHIP CERAMIC 1000PF B	(1608)
C445	1-117-720-91	CAP, CERAMIC 4.7MF F	(2012)
C449	1-162-964-91	CAP,CHIP CERAMIC 1000PF B	(1608)
C452	1-164-156-91	CAP, CHIP CERAMIC 0.1MF F	(1608)
C453	1-164-156-91	CAP, CHIP CERAMIC 0.1MF F	(1608)
C454	1-124-779-21	CAP, ELECT 10MF	
C455	1-124-779-21	CAP, ELECT 10MF	
C456	1-124-779-21	CAP, ELECT 10MF	
C458	1-135-347-21	CAP, SOLID ELECT 82MF	
C459	1-135-347-21	CAP, SOLID ELECT 82MF	
C460	1-164-174-91	CAP,CERAMIC 8200PF B	(1608)
C461	1-164-174-91	CAP,CERAMIC 8200PF B	(1608)
C462	1-135-347-21	CAP, SOLID ELECT 82MF	
C465	1-107-826-91	CAP, CHIP CERAMIC 100000PF B	
C467	1-126-209-21	CAP, ELECT 100MF	
C469	1-162-977-91	CAP, CERAMIC 1800PF B	(1608)
C470	1-107-826-91	CAP, CHIP CERAMIC 100000PF B	
C471	1-164-379-91	CAP, CERAMIC 43PF CH	(1608)
C472	1-107-826-91	CAP, CHIP CERAMIC 100000PF B	
C473	1-162-970-91	CAP, CERAMIC 10000PF B	(1608)
C474	1-107-826-91	CAP, CHIP CERAMIC 100000PF B	
C475	1-164-730-91	CAP,CERAMIC 1200PF B	(1608)
C476	1-115-339-91	CAP, CERAMIC 0.1MF B	(2012)
C478	1-124-779-21	CAP, ELECT 10MF	
C479	1-125-837-91	CAP, CHIP CERAMIC 1MF B	(1608)
C480	1-115-339-91	CAP, CERAMIC 0.1MF B	(2012)
C481	1-135-593-21	CAP, ELECT 150MF	
C482	1-107-826-91	CAP, CHIP CERAMIC 100000PF B	
C483	1-107-826-91	CAP, CHIP CERAMIC 100000PF B	
C484	1-135-593-21	CAP, ELECT 150MF	
C485	1-107-826-91	CAP, CHIP CERAMIC 100000PF B	
C486	1-131-999-21	CAP, SOLID ELECT 150MF	
C487	1-131-999-21	CAP, SOLID ELECT 150MF	
C488	1-115-566-91	CAP, CERAMIC 4.7MF B	
C489	1-131-999-21	CAP, SOLID ELECT 150MF	
C491	1-126-209-21	CAP, ELECT 100MF	
C492	1-107-826-91	CAP, CHIP CERAMIC 100000PF B	
C493	1-107-826-91	CAP, CHIP CERAMIC 100000PF B	
C494	1-107-725-91	CAP, CERAMIC 100000PF B (2012)	
C495	1-125-837-91	CAP, CHIP CERAMIC 1MF B	(1608)
C496	1-107-682-91	CAP, CERAMIC 1000000PF B 3216	
C497	1-162-964-91	CAP,CHIP CERAMIC 1000PF B	(1608)
C498	1-124-779-21	CAP, ELECT 10MF	
C499	1-164-505-91	CAP, CHIP CERAMIC 2.2MF F (2012)	

Ref.	Part No.	Description	
C500	1-126-205-21	CAP, ELECT 47MF	
C501	1-126-205-21	CAP, ELECT 47MF	
C502	1-162-964-91	CAP,CHIP CERAMIC 1000PF B	(1608)
C503	1-126-200-21	CAP, ELECT 10MF	
C504	1-163-009-91	CAP,CHIP CERAMIC 1000PF B	(2012)
C505	1-126-205-21	CAP, ELECT 47MF	
C506	1-126-205-21	CAP, ELECT 47MF	
C507	1-162-964-91	CAP,CHIP CERAMIC 1000PF B	(1608)
C508	1-126-205-21	CAP, ELECT 47MF	
C509	1-126-200-21	CAP, ELECT 10MF	
C510	1-126-205-21	CAP, ELECT 47MF	
C511	1-126-205-21	CAP, ELECT 47MF	
		<CONNECTOR>	
CN401	1-815-305-11	CONNECTOR (PLUG) 4P	
CN404	1-815-231-21	CONNECTOR, FFC/FPC (ZIF) 40P	
CN405	1-815-303-11	CONNECTOR, BOARD TO BOARD 34P	
CN406	1-779-345-11	CONNECTOR, FFC/FPC 7P	
		<DIODE>	
D401	8-719-016-75	DIODE 1SS352-TPH3	
D404	8-719-033-15	DIODE HN2D02FU-TE85R	
D407	8-719-074-34	DIODE RB495D-T146	
D408	8-719-074-34	DIODE RB495D-T146	
		<FUSE>	
⚠ F001	1-576-434-21	FUSE, CHIP	
⚠ F002	1-576-434-21	FUSE, CHIP	
		<FERRITE BEAD>	
FB003	1-469-667-21	FERRITE, EMI (SMD)	
FB004	1-469-667-21	FERRITE, EMI (SMD)	
FB005	1-469-667-21	FERRITE, EMI (SMD)	
FB006	1-469-667-21	FERRITE, EMI (SMD)	
FB007	1-469-667-21	FERRITE, EMI (SMD)	
FB008	1-469-667-21	FERRITE, EMI (SMD)	
		<IC>	
IC401	8-759-666-11	IC S-80769SN-JO-T2	
IC402	8-749-019-21	IC TMP87C807U-2A69	
IC403	8-759-688-08	IC MM1537DFBE	
IC405	8-759-560-17	IC RS5C348A-E2	
IC406	8-759-667-20	IC BR9080F-E2	
IC407	8-759-712-66	IC PQ018PZ01ZP	
IC409	8-759-689-89	IC SN104809DBTR	
IC411	8-759-688-06	IC MM3031JULE	
IC412	8-749-018-41	IC SI-3025LSA-TL	
IC413	8-759-665-28	IC SI-3034LSA-TL	
IC414	8-759-069-41	IC TA7808F(TE16L)	
		<INDUCTOR>	
L405	1-416-948-21	COIL, CHOKE 10UH	
L406	1-419-491-21	COIL, CHOKE 10UH	
L407	1-419-491-21	COIL, CHOKE 10UH	
L408	1-419-898-21	COIL, CHOKE 5.6UH	
L409	1-469-966-21	INDUCTOR, CHIP 1UH	(2518)
		<LINK>	
⚠ PS001	1-533-674-21	RINK, CHIP IC	
⚠ PS002	1-533-940-21	RINK, CHIP IC	
⚠ PS003	1-533-940-21	RINK, CHIP IC	
⚠ PS004	1-533-915-41	RINK, CHIP IC	
⚠ PS005	1-533-282-21	LINK, IC	
⚠ PS006	1-533-940-21	RINK, CHIP IC	
⚠ PS007	1-533-915-41	RINK, CHIP IC	
⚠ PS008	1-533-282-21	LINK, IC	

Reproduction Prohibited

Ref.	Part No.	Description	
⚠ PS009	1-533-674-21	RINK, CHIP IC	
		<TRANSISTOR>	
Q405	8-729-427-47	TRANSISTOR XP4213-TXE	
Q406	8-729-053-79	TRANSISTOR IRF7901D1-TR	
Q407	8-729-046-04	TRANSISTOR FDS6690A	
Q408	8-729-051-61	TRANSISTOR IRF7807D1-TR	
Q409	8-729-427-47	TRANSISTOR XP4213-TXE	
Q410	8-729-029-14	TRANSISTOR DTC144EUA-T106	
Q411	8-729-043-74	TRANSISTOR SI4435DY-T1-REVA	
Q412	8-729-043-74	TRANSISTOR SI4435DY-T1-REVA	
Q414	8-729-043-74	TRANSISTOR SI4435DY-T1-REVA	
Q415	8-729-029-14	TRANSISTOR DTC144EUA-T106	
Q416	8-729-028-91	TRANSISTOR DTA144EUA-T106	
		<RESISTOR>	
R429	1-216-833-91	RES, CHIP 10K	(1608)
R431	1-216-813-91	RES, CHIP 220	(1608)
R432	1-216-826-91	RES, CHIP 2.7K	(1608)
R434	1-216-810-91	RES, CHIP 120	(1608)
R435	1-216-810-91	RES, CHIP 120	(1608)
R440	1-218-861-91	RES, CHIP 3.9K	(1608)
R441	1-218-879-91	RES, CHIP 22K	(1608)
R442	1-218-869-91	RES, CHIP 8.2K	(1608)
R443	1-218-865-91	RES, CHIP 5.6K	(1608)
R444	1-218-881-91	RES, CHIP 27K	(1608)
R445	1-218-849-91	RES, CHIP 1.2K	(1608)
R446	1-216-817-91	RES, CHIP 470	(1608)
R447	1-216-817-91	RES, CHIP 470	(1608)
R449	1-216-829-91	RES, CHIP 4.7K	(1608)
R450	1-216-813-91	RES, CHIP 220	(1608)
R452	1-216-797-91	RES, CHIP 10	(1608)
R453	1-216-797-91	RES, CHIP 10	(1608)
R454	1-216-797-91	RES, CHIP 10	(1608)
R457	1-218-883-91	RES, CHIP 33K	(1608)
R458	1-216-797-91	RES, CHIP 10	(1608)
R459	1-216-833-91	RES, CHIP 10K	(1608)
R460	1-218-874-91	RES, CHIP 13K	(1608)
R461	1-216-309-91	RES, CHIP 5.6	(2012)
R462	1-216-864-91	CONDUCTOR, CHIP	(1608)
R463	1-216-857-91	RES, CHIP 1.0M	(1608)
R465	1-216-845-91	RES, CHIP 100K	(1608)
R466	1-216-833-91	RES, CHIP 10K	(1608)
R467	1-216-833-91	RES, CHIP 10K	(1608)
R469	1-216-833-91	RES, CHIP 10K	(1608)
R470	1-216-827-91	RES, CHIP 3.3K	(1608)
R471	1-216-822-91	RES, CHIP 1.2K	(1608)
R472	1-216-837-91	RES, CHIP 22K	(1608)
R473	1-216-837-91	RES, CHIP 22K	(1608)
R474	1-216-813-91	RES, CHIP 220	(1608)
R475	1-216-816-91	RES, CHIP 390	(1608)
R476	1-216-816-91	RES, CHIP 390	(1608)
R477	1-216-813-91	RES, CHIP 220	(1608)
R478	1-216-837-91	RES, CHIP 22K	(1608)
R479	1-216-829-91	RES, CHIP 4.7K	(1608)
R480	1-216-832-91	RES, CHIP 8.2K	(1608)
RB403	1-233-789-91	RES, NETWORK 10K	(1608)
RB405	1-233-803-91	RES, NETWORK 1.5K	(1608)
RB406	1-233-792-91	RES, NETWORK 100K	(1608)
RB407	1-233-795-91	RES, NETWORK 1.0M	(1608)
RB408	1-233-415-21	RES, CHIP NETWORK 10K	(3216)
RB409	1-233-415-21	RES, CHIP NETWORK 10K	(3216)
RB410	1-233-415-21	RES, CHIP NETWORK 10K	(3216)

Ref.	Part No.	Description	
		<THERMISTOR>	
⚠ TH401	1-533-817-21	THERMISTOR	
⚠ TH402	1-533-817-21	THERMISTOR	
⚠ TH403	1-533-817-21	THERMISTOR	
		<CRYSTAL>	
X401	1-760-496-22	VIBRATOR, LITHIUM NIOBATE	
X402	1-781-266-41	VIBRATOR, CRYSTAL	
**********			
	A-6712-834-A	**MOUNTED CIRCUIT BOARD, GI-006**	
		**********	
		PLACE CODE #25GI	
		<CONNECTOR>	
CN904	1-815-191-21	CONNECTOR BOARD TO BOARD 110P	
CN903	1-815-240-21	CONNECTOR BOARD TO BOARD 110P	
**********			
	A-6712-833-A	**MOUNTED CIRCUIT BOARD, GM-043**	
		**********	
		PLACE CODE #25GM	
		<CAPACITOR>	
C100	1-115-467-91	CAP, CHIP CERAMIC0.22MF B	(1608)
C101	1-115-467-91	CAP, CHIP CERAMIC0.22MF B	(1608)
C102	1-104-913-91	CAP, CHIP TANTALUM ELECT 10MF	
C103	1-135-900-21	CAP, TANTALUM ELECT 22MF	
C104	1-164-670-91	CAP, CERAMIC 1200PF SL	(1608)
C105	1-104-913-91	CAP, CHIP TANTALUM ELECT 10MF	
C106	1-135-900-21	CAP, TANTALUM ELECT 22MF	
C107	1-164-670-91	CAP, CERAMIC 1200PF SL	(1608)
C108	1-107-826-91	CAP, CHIP CERAMIC 100000PF B	
C109	1-164-173-91	CAP, CERAMIC 3900PF B	(1608)
C110	1-164-173-91	CAP, CERAMIC 3900PF B	(1608)
C111	1-115-467-91	CAP, CHIP CERAMIC0.22MF B	(1608)
C127	1-162-927-91	CAP, CERAMIC 100PF CH	(1608)
C128	1-162-927-91	CAP, CERAMIC 100PF CH	(1608)
C129	1-162-927-91	CAP, CERAMIC 100PF CH	(1608)
C130	1-162-927-91	CAP, CERAMIC 100PF CH	(1608)
C140	1-107-826-91	CAP, CHIP CERAMIC 100000PF B	
C141	1-107-826-91	CAP, CHIP CERAMIC 100000PF B	
C149	1-162-964-91	CAP, CHIP CERAMIC 1000PF B	(1608)
C150	1-162-927-91	CAP, CERAMIC 100PF CH	(1608)
C151	1-162-927-91	CAP, CERAMIC 100PF CH	(1608)
C152	1-162-927-91	CAP, CERAMIC 100PF CH	(1608)
C153	1-162-927-91	CAP, CERAMIC 100PF CH	(1608)
C154	1-162-966-91	CAP, CERAMIC 2200PF B	(1608)
C155	1-162-966-91	CAP, CERAMIC 2200PF B	(1608)
C156	1-162-966-91	CAP, CERAMIC 2200PF B	(1608)
C157	1-162-966-91	CAP, CERAMIC 2200PF B	(1608)
C158	1-104-913-91	CAP, CHIP TANTALUM ELECT 10MF	
C159	1-107-826-91	CAP, CHIP CERAMIC 100000PF B	
C160	1-104-913-91	CAP, CHIP TANTALUM ELECT 10MF	
C161	1-107-826-91	CAP, CHIP CERAMIC 100000PF B	
C163	1-107-826-91	CAP, CHIP CERAMIC 100000PF B	
C165	1-107-826-91	CAP, CHIP CERAMIC 100000PF B	
C166	1-104-851-91	CAP, CHIP TANTALUM ELECT 10MF	
C167	1-107-826-91	CAP, CHIP CERAMIC 100000PF B	
C169	1-107-826-91	CAP, CHIP CERAMIC 100000PF B	
C171	1-107-826-91	CAP, CHIP CERAMIC 100000PF B	
C172	1-104-913-91	CAP, CHIP TANTALUM ELECT 10MF	
C173	1-107-826-91	CAP, CHIP CERAMIC 100000PF B	
C174	1-162-975-91	CAP, CERAMIC 24PF CH	(1608)
C175	1-164-677-91	CAP, CERAMIC 33000PF B	(1608)

Ref.	Part No.	Description	
C176	1-107-826-91	CAP, CHIP CERAMIC 100000PF B	
C177	1-107-826-91	CAP, CHIP CERAMIC 100000PF B	
C178	1-107-826-91	CAP, CHIP CERAMIC 100000PF B	
C179	1-107-826-91	CAP, CHIP CERAMIC 100000PF B	
C180	1-107-826-91	CAP, CHIP CERAMIC 100000PF B	
C181	1-107-826-91	CAP, CHIP CERAMIC 100000PF B	
C183	1-107-826-91	CAP, CHIP CERAMIC 100000PF B	
C184	1-164-677-91	CAP, CERAMIC 33000PF B	(1608)
C185	1-107-826-91	CAP, CHIP CERAMIC 100000PF B	
C186	1-164-392-91	CAP, CERAMIC 390PF CH	(1608)
C187	1-115-467-91	CAP, CHIP CERAMIC0.22MF B	(1608)
C188	1-164-677-91	CAP, CERAMIC 33000PF B	(1608)
C189	1-164-739-91	CAP, CERAMIC 560PF CH	(1608)
C190	1-164-739-91	CAP, CERAMIC 560PF CH	(1608)
C196	1-162-964-91	CAP, CHIP CERAMIC 1000PF B	(1608)
C197	1-115-467-91	CAP, CHIP CERAMIC0.22MF B	(1608)
C198	1-125-837-91	CAP, CHIP CERAMIC 1MF B	(1608)
C199	1-125-837-91	CAP, CHIP CERAMIC 1MF B	(1608)
C402	1-164-505-91	CAP, CHIP CERAMIC 2.2MF F	(2012)
C403	1-113-642-91	CAP, CHIP TANTALUM ELECT 47MF	
C617	1-164-156-91	CAP, CHIP CERAMIC 0.1MF F	(1608)
C618	1-164-245-91	CAP, CERAMIC 15000PF B	(1608)
C620	1-164-677-91	CAP, CERAMIC 33000PF B	(1608)
C622	1-164-156-91	CAP, CHIP CERAMIC 0.1MF F	(1608)
C700	1-162-970-91	CAP, CERAMIC 10000PF B	(1608)
C701	1-162-970-91	CAP, CERAMIC 10000PF B	(1608)
C702	1-162-970-91	CAP, CERAMIC 10000PF B	(1608)
C703	1-164-156-91	CAP, CHIP CERAMIC 0.1MF F	(1608)
C704	1-164-156-91	CAP, CHIP CERAMIC 0.1MF F	(1608)
C705	1-164-156-91	CAP, CHIP CERAMIC 0.1MF F	(1608)
C706	1-127-692-91	CAP, CHIP CERAMIC 10MF B 3225	
C707	1-163-038-91	CAP, CERAMIC 100000PF F	(2012)
C710	1-164-156-91	CAP, CHIP CERAMIC 0.1MF F	(1608)
C713	1-164-156-91	CAP, CHIP CERAMIC 0.1MF F	(1608)
C717	1-163-009-91	CAP, CHIP CERAMIC 1000PF B	(2012)
C718	1-107-823-91	CAP, CERAMIC 470000PF B	(2012)
C719	1-163-038-91	CAP, CERAMIC 100000PF F	(2012)
C720	1-127-692-91	CAP, CHIP CERAMIC 10MF B 3225	
C722	1-163-009-91	CAP, CHIP CERAMIC 1000PF B	(2012)
C727	1-162-964-91	CAP, CHIP CERAMIC 1000PF B	(1608)
C728	1-164-230-91	CAP, CERAMIC 220PF CH	(1608)
C729	1-164-230-91	CAP, CERAMIC 220PF CH	(1608)
C730	1-164-230-91	CAP, CERAMIC 220PF CH	(1608)
C731	1-164-230-91	CAP, CERAMIC 220PF CH	(1608)
		<CONNECTOR>	
CN100	1-794-237-21	CONNECTOR, FFC/FPC 30P	
CN101	1-770-619-41	PIN, CONNECTOR 2P	
CN102	1-770-619-21	PIN, CONNECTOR 2P	
CN103	1-770-619-81	PIN, CONNECTOR 2P	
CN104	1-815-089-21	CONNECTOR, FPC LIF(NON-ZIF)13P	
CN105	1-779-206-21	CONNECTOR, FFC(LIF(NON-ZIF))4P	
CN109	1-793-823-21	CONNECTOR, FFC/FPC (ZIF) 54P	
		<DIODE>	
D100	8-719-065-68	DIODE MAZF04700LS0	
D101	8-719-065-68	DIODE MAZF04700LS0	
		<FERRITE BEAD>	
FB001	1-469-562-21	FERRITE, EMI (SMD)	
FB002	1-469-562-21	FERRITE, EMI (SMD)	
		<IC>	
IC101	8-759-685-15	IC SP3727ACA0PMR	
IC401	8-759-391-69	IC MC78M05CDTRK	
IC602	8-759-693-13	IC NJM12904V(TE2)	

Ref.	Part No.	Description	
IC607	8-759-712-63	IC MC74VHC1G66DFT1	
IC700	8-759-588-60	IC BA6664FM-E2	
IC701	8-759-370-11	IC NJM2100V-TE2	
IC703	8-759-658-87	IC BA5810FP-E2	
		<INDUCTOR>	
L100	1-469-524-91	INDUCTOR 4.7UH (NLFV25)	
L101	1-469-524-91	INDUCTOR 4.7UH (NLFV25)	
L102	1-414-394-41	INDUCTOR (SMD) 2.2UH	
		<COIL>	
LF001	1-416-405-21	FILTER, CHIP EMI (COMMON MODE)	
		<LINK>	
⚠ PS001	1-533-915-41	RINK, CHIP IC	
⚠ PS002	1-533-282-21	LINK, IC	
⚠ PS003	1-576-282-21	RINK, SQUARE CHIP TYPE IC	
		<TRANSISTOR>	
Q100	8-729-031-35	TRANSISTOR 2SK2034-TE85L	
Q101	8-729-103-96	TRANSISTOR 2SB798-T1DL	
Q102	8-729-029-13	TRANSISTOR DTC143ZUA-T106	
Q103	8-729-031-35	TRANSISTOR 2SK2034-TE85L	
Q104	8-729-103-96	TRANSISTOR 2SB798-T1DL	
Q105	8-729-048-50	TRANSISTOR 2SK3018-T106	
Q107	8-729-048-50	TRANSISTOR 2SK3018-T106	
Q111	8-729-048-50	TRANSISTOR 2SK3018-T106	
Q112	8-729-905-38	TRANSISTOR 2SC4081T106R	
Q113	8-729-905-38	TRANSISTOR 2SC4081T106R	
Q700	8-729-029-13	TRANSISTOR DTC143ZUA-T106	
		<RESISTOR>	
R104	1-216-158-91	RES, CHIP 22	(3216)
R105	1-216-158-91	RES, CHIP 22	(3216)
R106	1-216-809-91	RES, CHIP 100	(1608)
R107	1-216-833-91	RES, CHIP 10K	(1608)
R108	1-216-797-91	RES, CHIP 10	(1608)
R109	1-216-809-91	RES, CHIP 100	(1608)
R110	1-216-833-91	RES, CHIP 10K	(1608)
R112	1-216-158-91	RES, CHIP 22	(3216)
R113	1-216-158-91	RES, CHIP 22	(3216)
R114	1-216-797-91	RES, CHIP 10	(1608)
R115	1-218-871-91	RES, CHIP 10K	(1608)
R116	1-218-871-91	RES, CHIP 10K	(1608)
R117	1-218-881-91	RES, CHIP 27K	(1608)
R118	1-218-881-91	RES, CHIP 27K	(1608)
R119	1-218-881-91	RES, CHIP 27K	(1608)
R121	1-218-890-91	RES, CHIP 62K	(1608)
R125	1-218-881-91	RES, CHIP 27K	(1608)
R126	1-218-889-91	RES, CHIP 56K	(1608)
R130	1-218-873-91	RES, CHIP 12K	(1608)
R131	1-216-864-91	CONDUCTOR, CHIP	(1608)
R132	1-216-864-91	CONDUCTOR, CHIP	(1608)
R133	1-216-864-91	CONDUCTOR, CHIP	(1608)
R134	1-216-864-91	CONDUCTOR, CHIP	(1608)
R145	1-216-864-91	CONDUCTOR, CHIP	(1608)
R146	1-216-864-91	CONDUCTOR, CHIP	(1608)
R147	1-216-864-91	CONDUCTOR, CHIP	(1608)
R148	1-216-864-91	CONDUCTOR, CHIP	(1608)
R150	1-216-864-91	CONDUCTOR, CHIP	(1608)
R151	1-216-802-91	RES, CHIP 27	(1608)
R152	1-216-816-91	RES, CHIP 390	(1608)
R153	1-216-810-91	RES, CHIP 120	(1608)
R155	1-216-864-91	CONDUCTOR, CHIP	(1608)
R401	1-216-025-91	RES, CHIP 100	(2012)

Reproduction Prohibited

Ref.	Part No.	Description	
R402	1-216-025-91	RES, CHIP 100	(2012)
R403	1-216-025-91	RES, CHIP 100	(2012)
R404	1-216-025-91	RES, CHIP 100	(2012)
R405	1-216-025-91	RES, CHIP 100	(2012)
R406	1-216-025-91	RES, CHIP 100	(2012)
R407	1-216-025-91	RES, CHIP 100	(2012)
R408	1-216-025-91	RES, CHIP 100	(2012)
R610	1-216-849-91	RES, CHIP 220K	(1608)
R611	1-216-849-91	RES, CHIP 220K	(1608)
R612	1-218-896-91	RES, CHIP 110K	(1608)
R618	1-216-845-91	RES, CHIP 100K	(1608)
R621	1-216-839-91	RES, CHIP 33K	(1608)
R628	1-216-844-91	RES, CHIP 82K	(1608)
R629	1-216-828-91	RES, CHIP 3.9K	(1608)
R751	1-216-815-91	RES, CHIP 330	(1608)
R752	1-216-810-91	RES, CHIP 120	(1608)
R753	1-216-298-91	RES, CHIP 2.2	(2012)
R754	1-216-298-91	RES, CHIP 2.2	(2012)
R755	1-216-298-91	RES, CHIP 2.2	(2012)
R756	1-216-298-91	RES, CHIP 2.2	(2012)
R777	1-216-845-91	RES, CHIP 100K	(1608)
R782	1-216-864-91	CONDUCTOR, CHIP	(1608)
R785	1-218-887-91	RES, CHIP 47K	(1608)
R787	1-218-892-91	RES, CHIP 75K	(1608)
R788	1-218-887-91	RES, CHIP 47K	(1608)
R791	1-218-892-91	RES, CHIP 75K	(1608)
R792	1-218-899-91	RES, CHIP 150K	(1608)
R793	1-218-899-91	RES, CHIP 150K	(1608)
R794	1-218-899-91	RES, CHIP 150K	(1608)
R795	1-218-899-91	RES, CHIP 150K	(1608)
R796	1-216-864-91	CONDUCTOR, CHIP	(1608)
R797	1-216-864-91	CONDUCTOR, CHIP	(1608)
RB100	1-233-415-21	RES, CHIP NETWORK 10K	(3216)
RB701	1-233-578-21	RES, CHIP NETWORK 47K	
RB702	1-233-578-21	RES, CHIP NETWORK 47K	

****

A-6712-830-A MOUNTED CIRCUIT BOARD, SW-355
****
PLACE CODE #25SW

<CONNECTOR>

CN851	1-794-627-21	CONNECTOR, FFC/FPC 7P

<DIODE>

D851	8-719-078-90	DIODE CL-165HR/G1-D-T
D852	8-719-080-04	DIODE CL-190UB-X-T

<TRANSISTOR>

Q851	8-729-029-14	TRANSISTOR DTC144EUA-T106

<RESISTOR>

R852	1-216-835-91	RES, CHIP 15K	(1608)
R853	1-216-993-91	RES, CHIP 2.4K	(1608)

<SWITCH>

S851	1-771-917-21	SWITCH, TACTILE
S852	1-771-917-21	SWITCH, TACTILE

****

Ref.	Part No.	Description	
		SUPPLIED ACCESSORIES	PLACE CODE #23
		**********	
	A-6785-133-A	ACCESSORY & PACKING GROUP	#23
⚠ AC	1-790-108-21	CORD, POWER	#23
AV	1-792-028-11	CORD, CONNECTION	#23
CONT	1-792-238-62	DS2 ANALOG CONTROLLER	#23
CU2	3-064-713-01	CUSHION 2	#23
CU	3-064-714-01	CUSHION	#23
MA	3-065-169-02	MASTER CARTON, 3 SETS	#23
SH	3-065-170-01	SHEET, PROTECTION	#23
CA	3-065-171-02	INDIVIDUAL CARTON	#23
MABC	3-066-856-01	MASTER CARTON (BC), 3 SETS	#23
TA	3-987-483-11	TAPE, BERODDED PREVENTION	#23
PR	A-6784-838-A	PROCESS GROUP, LABEL	#23
		MANUAL BLOCK ASSY	PLACE CODE #23
		**********	
	A-6785-134-A	MANUAL BLOCK ASSY, INSTRUCTION	#23
BA	3-054-064-01	BAG, POLYETHYLENE	#23
SHES	3-060-161-02	SHEET, ESRB	#23
CA	3-066-021-01	CARD, CUSTOMER INQUIRY	#23
IN	3-066-542-11	MANUAL, INSTRUCTION	#23
CSN	3-066-966-01	CARD, SERVICE NUMBER	#23
BAG	3-701-630-01	BAG, POLYETHYLENE	#23

****

Ref.	Part No.	Description

Ref.	Part No.	Description

Reproduction Prohibited

TABLE OF CONTENTS

SCPH-30001 (B, B')

SCPH-30001 (C)

SCPH-30002/30003/30004 (C, C')

1. **Table of Contents and Specifications** 1

2. **Exploded Views**
   - Overall and Main Block 2
   - MD Block 3
   - Frame (Upper) Block 4
   - Switch Block 4
   - Shield (A) Assembly Block 5

3. **Block Diagram** 6

4. **Printed Wiring Boards and Schematic Diagrams**
   - This Note is Common for Printed Wiring boards and Schematic diagrams 7
   - GH-006 8
   - GH-007 18
   - GD-013 28
   - GM-043 30
   - GI-006 34
   - SW-355 36
   - IC Block Diagrams 37

5. **Electrical Parts List** 41

SECTION 1
SPECIFICATIONS

General
Power requirements
220-240 V AC, 50/60 Hz
Power consumption
50 W
Dimensions
301 × 78 × 182 mm (w/h/d)
Mass
2.4 kg

Inputs/ Outputs on the front
Controller ports (2)
Memory card slots (2)
USB ports (2)
S400 (i-Link) port (1)

Inputs/Outputs on the rear
HDD bay slot (1)

Outputs on the rear
AV Multi out port (1)
RGB, Ycbcr, Y/C, Composite-video, Audio-L/R, XGA
Digital out port (1)
Optical audio

Supplied accessories
AC power cord (1)
Euro-AV connector (1)
(for SCPH-30003, 30004)
A/V connecting cable (1)
Dualshock2 Analog controller (1)

Reproduction Prohibited

Overall and Main Block

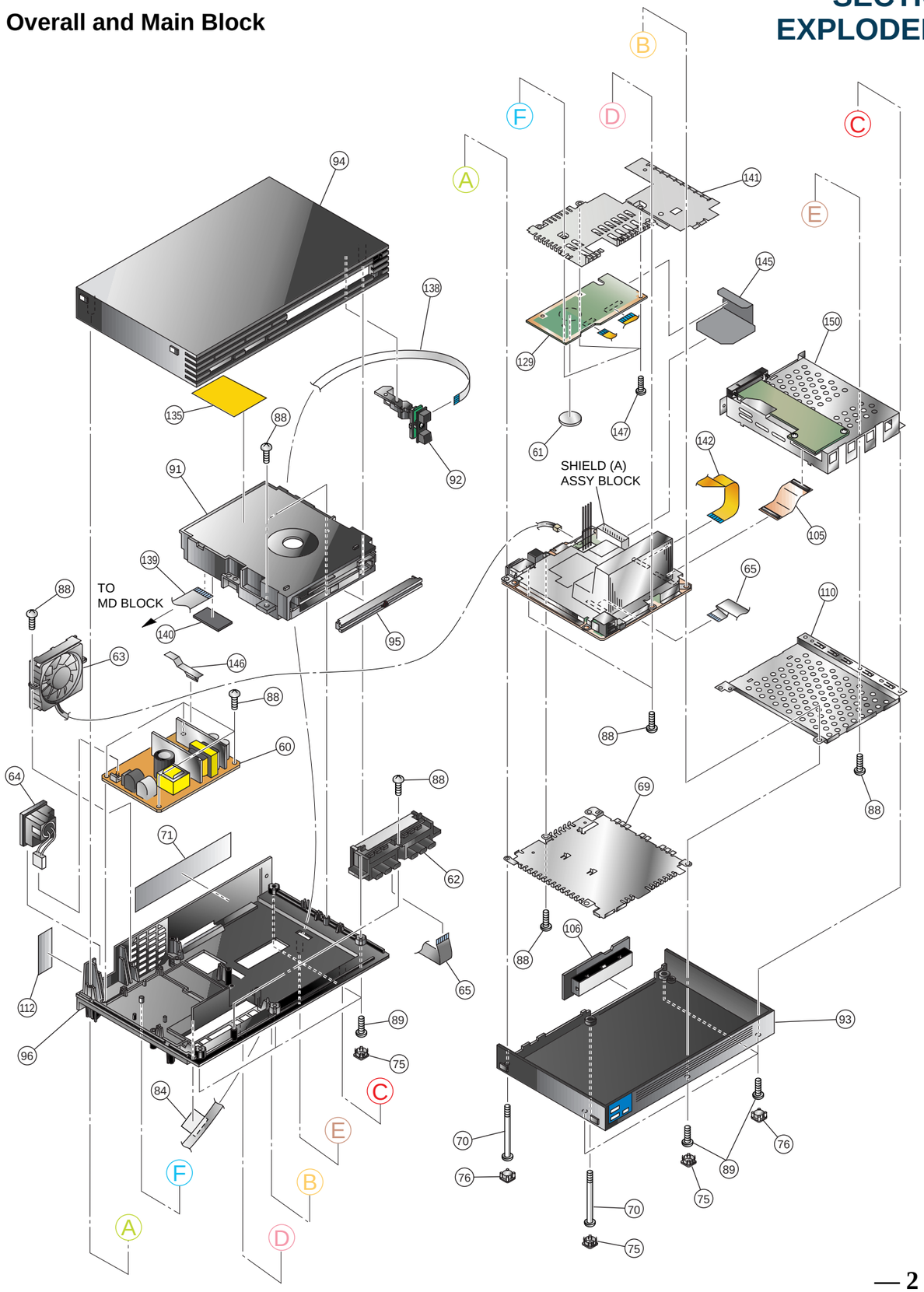

SECTION 2
EXPLODED VIEWS

CAUTION

The components identified by mark ⚠ or dotted line with mark. ⚠ are critical for safety. Replace only with part number specified.

CAUTION :
Use of controls or adjustments or performance of procedures other than those specified herein may result in hazardous radiation exposure.

OVERALL AND MAIN BLOCK

	Ref-No.	Part No.	Description	Remark	Place code
⚠	60	1-468-565-21	POWER BLOCK		#00
⚠	61	1-528-174-41	BATTERY, LITHIUM (CR2032 TYPE)		#25GD
	62	1-694-767-11	TERMINAL BOARD (FRONT)		#17
	63	1-763-480-11	DC. FAN		#74
⚠	64	1-771-995-12	SWITCH, POWER (WITH AC INLET)		#00
	65	1-792-491-21	CABLE, FLEXIBLE FLAT (FFC-290)		#12
	69	3-066-489-01	SHIELD (B)		#16
	70	3-059-622-02	SCREW (M3X54), HEAD TAPPING		#87
	71	3-066-442-02	LABEL, MODEL NUMBER	for SCPH-30003	#87
	71	3-066-445-02	LABEL, MODEL NUMBER	for SCPH-30002	#87
	71	3-066-490-02	LABEL, MODEL NUMBER	for SCPH-30004	#87
	75	3-059-626-03	COVER, SCREW		#22
	76	3-059-627-01	CAP		#22
	84	3-067-170-01	TAPE, HARNESS STOPPER		#88
	88	3-325-679-21	SCREW, TAPPING +BV 3X12		#87
	89	3-325-679-91	SCREW (2 LOCK), +BV TAPPING		#87
	91	A-6705-247-A	MD BLOCK ASSY		#10
	92	A-6705-235-A	SWITCH BLOCK ASSY		#25SW
	93	X-3951-398-1	COVER ASSY, LOWER		#87
	94	X-3951-498-1	COVER ASSY, UPPER		#87
	95	X-3951-099-1	PLATE ASSY, ORNAMENTAL		#87
	96	X-3951-395-1	CHASSIS ASSY		#87
	105	1-680-147-11	PWB, FP-324 FLEXIBLE		#12
	106	X-3951-317-1	LID ASSY		#87
	110	3-066-501-01	FRAME (LOWER)		#16
	112	3-066-498-01	TAPE, VOID		#87
	129	A-6712-863-A	GD-013-21 MOUNT		#25GD
⚠	135	3-988-711-02	LABEL, LASER CAUTION		#10
	138	1-757-588-11	CABLE, FLAT (FFC-308)		#12
	139	1-757-590-11	CABLE, FLAT (FFC-310)		#12
	140	3-066-545-01	SHEET (R), ELECTRIC HEAT		#16
	141	X-3951-396-1	SHIELD (C) ASSY		#87
	142	1-757-589-11	CABLE, FLAT (FFC-309)		#25GD
	145	3-066-594-01	SHEET (H), INSULATING		#25GH
	146	3-066-609-01	CLIP, SHIELD		#00
	147	3-066-488-01	SCREW (M3X9), +BV TAPPING		#25GD
	150	A-6705-236-A	FRAME (UPPER) BLOCK ASSY		#87

Reproduction Prohibited

MD Block

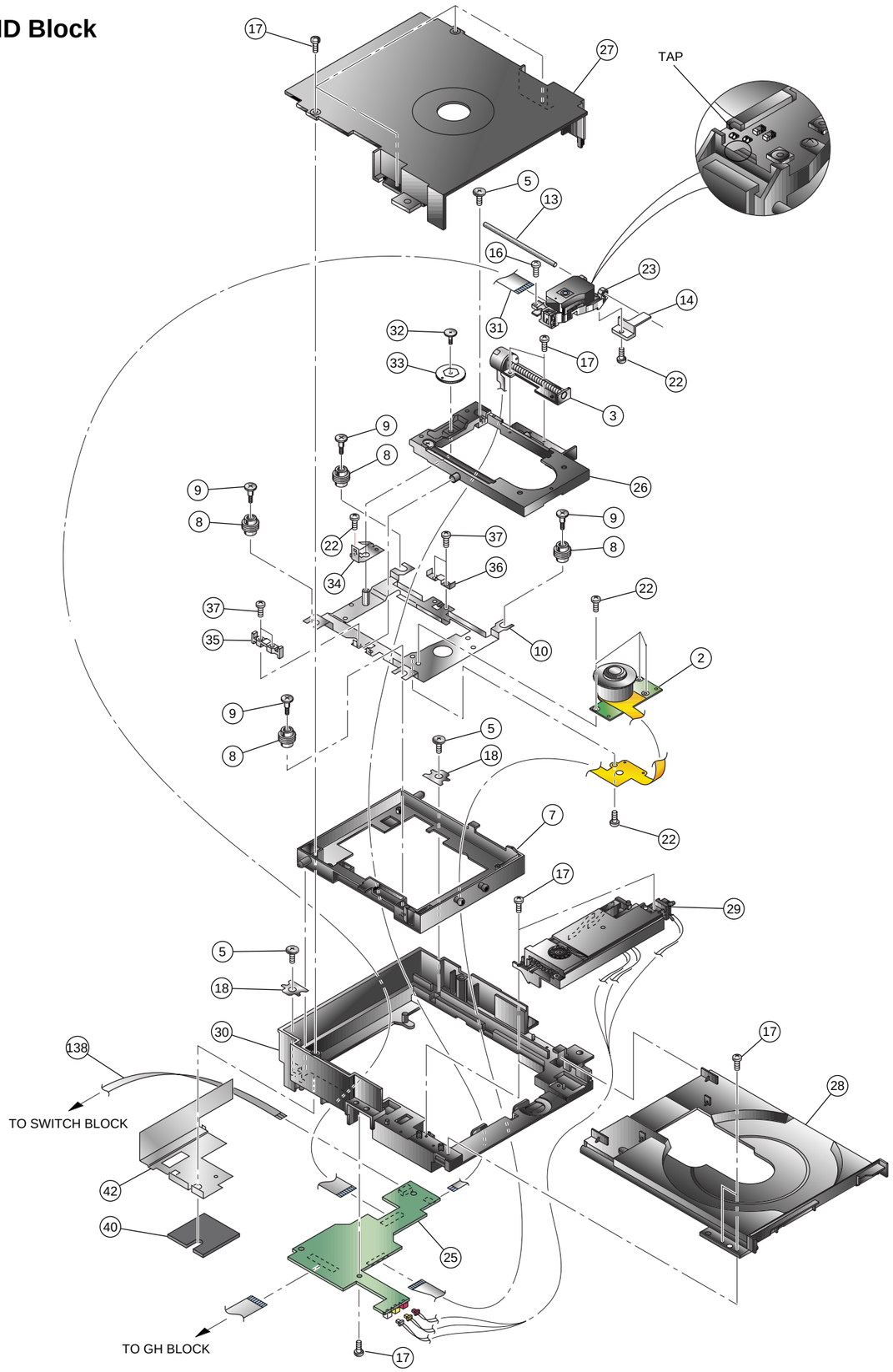

MD BLOCK

	Ref-No.	Part No.	Description	Remark	Place code
	2	1-763-611-11	MOTOR, DC (SPINDLE)		#10SP
	3	1-763-639-11	MOTOR, DC		#10
	5	3-059-845-01	SCREW (B2X6.5), SHAFT RETAINER		#10
	7	3-065-275-02	FRAME, SUB		#10
	8	3-065-277-01	INSULATOR		#10
	9	3-065-276-01	SCREW, STEP		#10
	10	X-3951-151-1	CHASSIS ASSY, MAIN		#10
	13	3-059-854-01	SHAFT, MAIN		#10
	14	3-059-855-02	RACK		#10
	16	3-060-399-01	SCREW, SKEW		#10
	17	3-060-400-01	TAPPING (B2X6.5)		#10
	18	3-065-281-01	SHEET, SHAFT RETAINER		#10
	22	3-062-728-01	0 PLATE 3 MAIN M2X3.2		#10
⚠	23	8-820-141-01	DEVICE, OPICAL KHS-400B		#10OP
	25	A-6712-833-A	GM043MOUNT		#10GM
	26	X-3951-152-2	CHASSIS ASSY, SUB		#10
	27	X-3951-154-2	BRACKET ASSY, PULLEY		#10
	28	X-3951-153-2	TRAY ASSY		#10TR
	29	X-3951-156-3	BOX ASSY, GEAR		#10GB
	30	3-065-271-03	FRAME, MAIN		#10
	31	1-680-370-11	PWB, FLEXIBLE		#10
	32	3-065-279-02	SCREW, CAM RETAINER		#10
	33	3-065-278-02	CAM, TILT		#10
	34	3-067-169-01	SPRING (TILT), PLATE		#10
	35	3-065-282-01	GUIDE (L)		#10
	36	3-065-283-01	GUIDE (R)		#10
	37	3-065-557-01	SCREW (M2X6.0)		#10
	38	3-065-274-01	CAM, SLIDE		#10GB
	39	3-065-505-0	BELT, RUBBER		#10GB
	40	3-067-186-01	SHEET (V), ELECTRIC HEAT		#10
	42	X-3951-501-1	HEAT SINK ASSY, MD		#10
	138	1-757-588-11	CABLE, FLAT (FFC-308)		#12

CAUTION

There are 2 taps behind Optical device for prevent the damage from static electricity.
these are usually shorted by solder when it shipping factory.
When You use the Optical device for repair, You have to open the 2 taps by melting solder.

In s case of the slide-cam (Ref.38) or the rubber belt (Ref.39) in the gear box assy broken, The slide-cam or The rubber belt should be exchanged itself, not Gear box assy.
When you exchange the feed DC-motor or Sub-chassis assy for repair, You have to grease Floil (SG474BY or a similar articles) up to Feed motor sledding gear and Sub-shaft.

Reproduction Prohibited

Frame (Upper) Block

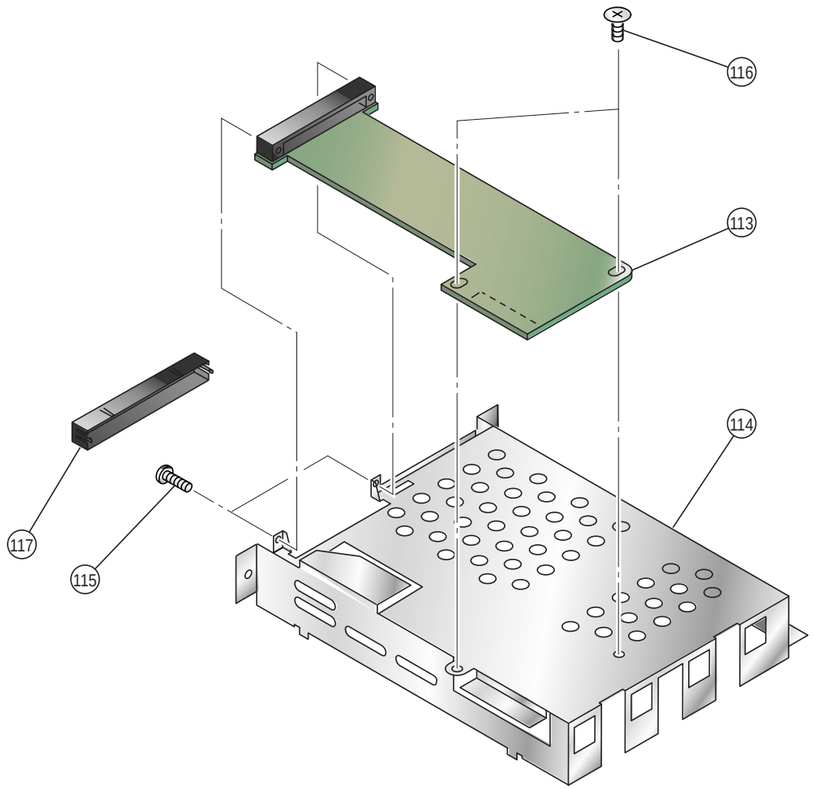

FRAME (UPPER) BLOCK

Ref-No.	Part No.	Description	Remark	Place code
113	A-6712-834-A	GI-006 MOUNT		#25GI
114	X-3951-399-1	FRAME (UPPER) ASSY		#87
115	3-065-998-01	SCREW (M2X9), UNIT		#87
116	3-065-999-01	SCREW B (M2X1.6), UNIT		#87
117	3-066-273-01	COVER, CONNECTOR		#25GI

Switch Block

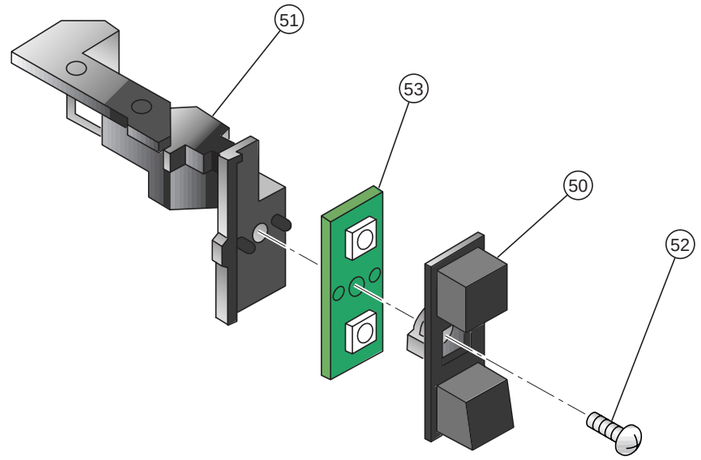

SWITCH BLOCK

Ref-No.	Part No.	Description	Remark	Place code
50	3-059-665-03	BUTTON, SWITCH		#25SW
51	3-059-666-05	BRACKET, SWITCH		#25SW
52	7-685-105-11	TPG +P 2X8, TYPE 2, NON-SLIT		#25SW
53	A-6712-830-A	SW-355 MOUNT		#25SW

Reproduction Prohibited

Shield (A) Assembly Block

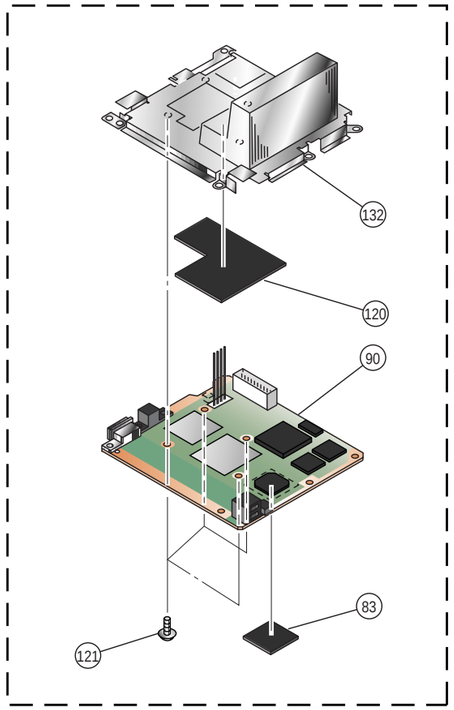

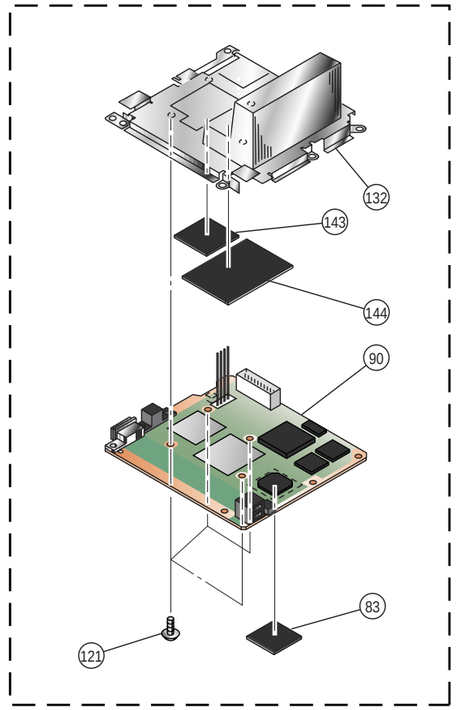

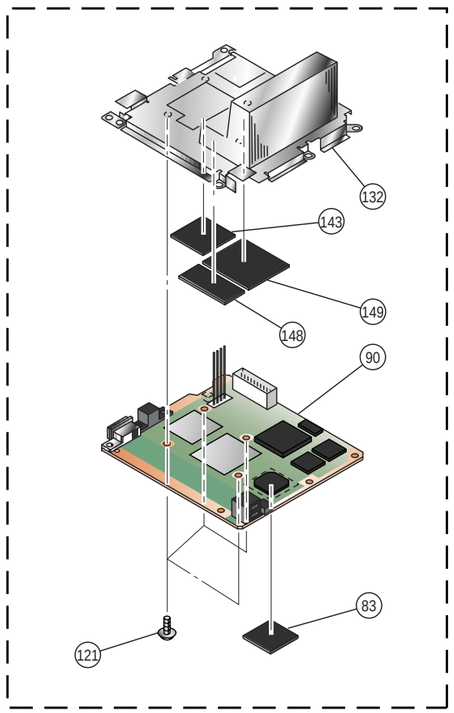

SHIELD (A) ASSEMBLY BLOCK

Ref-No.	Part No.	Description	Remark	Place code
83	3-060-388-01	SHEET, FERRITE		#87
90	A-6712-838-A	GH-006 MOUNT		#25GH
90	A-6712-856-A	GH-006 MOUNT		#25GH
90	A-6712-831-A	GH-006-11 MOUNT		#25GH
90	A-6712-835-A	GH-006-21 MOUNT		#25GH
90	A-6712-836-A	GH-006-11 MOUNT		#25GH
90	A-6712-837-A	GH-006-21 MOUNT		#25GH
90	A-6712-857-A	GH-007-11 MOUNT		#25GH
90	A-6712-858-A	GH-007-21 MOUNT		#25GH
90	A-6712-860-A	GH-007-11 MOUNT		#25GH
90	A-6712-861-A	GH-007-21 MOUNT		#25GH
120	3-059-652-01	SHEET (A), ELECTRIC HEAT		#87
121	3-061-369-01	SCREW (M2X6), PAN		#25GI
132	X-3951-394-1	SHIELD (A) ASSY		#87
143	3-066-277-01	SHEET (P), ELECTRIC HEAT		#25GH
144	3-066-278-01	SHEET (Q), ELECTRIC HEAT		#25GH
148	3-066-278-02	SHEET (Q), ELECTRIC HEAT		#87
149	3-066-678-01	SHEET (R), ELECTRIC HEAT		#87

Reproduction Prohibited

SECTION 3
BLOCK DIAGRAM

IC Ref No. : A side
IC Ref No. : B side

CN002
CN001, CN302
FRONT TERMINAL
CONTROLLER 1 DATA
MEMORY CARD 1 DATA (Magic Gate)
CONTROLLER 2 DATA
MEMORY CARD 2 DATA (Magic Gate)

IOP
IC303
IOP
IC305
EDO RAM
WE
MD0-31
MA0-9
CAS0-3
IC306
REF.V GEN.
+2.5V
VREF
X302 16.9344MHz
X301 24.576MHz
PLL
400MHz
PHY
USB PORTX2
i LINK
CN303
FL301, 302
CN301
(DATA+,DATA−)X2
TPA/TPAn/TPB/TPBn
4X2

EE+RDRAM
IC104
EMOTION ENGINE
SIF
CPU
GIF
TIMER
DMAC
VU0
VU1
SIO
INTC
IPU
128bit BUS
IC102
IC103
RDRAM (16MB)
DRAMC
RQ_A0-7/RQ_B0-7
DQA_A0-7/DQA_B0-7
DQB_A0-7/DQB_B0-7
CTMN
CTM
IC101
CLOCK GENERATOR
X101 18.432MHz

AD0-31
/BE0-3
/RDAC
/WRAC
/RDY
/BREQ
/BGNT
DREQ0
DREQ1
DACK
/SGINT
/SINT
/SRST
MSCLK
PGCLK

GD0-63
GA0-6
CLKCG
CLKGC
/VLDCG
/VLDGC
/RDYCG
/RDYGC
GRW
/GACK
/GREQ
/GINT

GS+VIDEO
IC202
GRAPHICS SYNTHESIZER
ARED
AGEN
ABLU
SPCLK
X202 54MHz
IC205
RGB to YCrCB MATRIX
Mod
DAC
SYNC_GEN,HD0,1
CONTROL REGISTER
M-Bus Control Module
DIGITAL VIDEO ENCODER
RO0-7
GO0-7
BO0-7
C
Y
COMPONENT
DIGITAL DATA
MODE0-2
D0-2
IC206
ANALOG VIDEO ENCODER
R
G
B
RIN1
GIN1
BIN1
HSYNC, VSYNC, CSSYNC, PAL/NTSC, CLOCK, RGBYC
COUT
YOUT
CVBS-OUT
BOUT/CbOUT/PbOUT
GOUT/YOUT
ROUT/CbOUT/PbOUT
AUL
AUR
CN201
AV MULTI OUT

IC501
HDD CONTROLLER
SCL
SDA
/DVRST
RT
HDD DATA (CD0-15)
HDD ADDRESS (CA0-25)
CONTROL
CN504
to HDD

SPU2+ HDD+ DVD+ AUDIO
IC503, 506 : for GH-006/007-21
IC505 : for GH-006/007-11
BOOT ROM DVD ROM
SD0-15
SA0-21
/CS1,/CS2
SUB DATA BUS
SUB ADDRESS BUS
SYSTEM CONTROL BUS
SD0-15
SA0-26
SPUDATI/SPUBCKI/SPULRCKI
SPUDI,SPUDATI SPUBCKI,SPULRCKI
/POFF_RDY SLEEP PO_DISC POFF_REQ
PWRUP_EE/ESTBY/ERST
GSTBY,LCLK,/GRST

IC105
LOW POWER THERMOSTAT
T1;70.6°C
T2;76.7°C
TS_SI

MD BLOCK
CD-ROM { PlayStation Format / PlayStation2 Format }
DVD VIDEO / DVD ROM / AUDIO CD { PlayStation2 Format }

RF-AMP+DRIVER
IC101
RF AMP
CN100-105
CN109
CN604
PD1
PD2
A-F
FE
TE
CE
RFD0
CONTROL BUS
IC700
SPINDLE CONTROL
DRIVER
IC701,703
FORCUS/TRACKING/ SLIDE/LOADING
H (±), H1 (±) H2 (±), H3 (±) A1, 2, 3
STD (±A, ±B) TD _OFST LOADING (±) TRK (±) FCS (±)
SP_GAINSW/ SP_PS/SPDL/ SP_SB/SP_BR
STEP(±A,±B) TRAY(CNT,DRVF,DRVR)
DECK CONTROL BUS
GM-043

µCON+DSP
IC605
CD/DVD DSP
(FF,FR,TF,TR)DR
IC604
MECHA-CON
MCD0-7
MCA0-8
CONTROL BUS
/POFF_RDY SYS_SRST TRAY_REQ MCON_ACK
IC405
TIMER
EEP-SI
EEP-SO
EEP-SCK
EEP-CE
PG5
PG6
PG7
PG4
PB2
IC406
EEP ROM
X402 32.768MHz
EVER3.5V
BT401
GD-013

DD+SYSTEM CONTROL
IC402
SYSTEM CONTROL
X401 4MHz
/SSRST,/RST
SLEEP,POFF_REQ,OP_DISC
HDD_SW, SW1.5, SW1.9/SW2.5 SW5.1/SW3.3, SW12, FAN_PWM
GREEN_ON
RED_ON
Q405
PWR_SW,/GREEN_ON,OP/CL_SW,/RED_ON
TRAY_LED-ON
Q601
/BLUE_ON

SPU2+AUDIO+HDD
IC502
DRAM
IC504
SPU2
SPMD0-15
SPMA0-9
WE
RAS
CAS
OE
RST
DAD OUT
DABCK OUT
DALRCK OUT
DACKK
SPMUTE
Q505
/RST
IC517
AUDIO D/A CONVERTER
Q506
MUTE
DIGITAL OUT
CN501
OPTICAL DIGTAL OUT

SYSTEM POWER REGURATOR/FAN DRIVE/USB DRIVE/HDD DRIVE		CN407
GD-013		GH-006/007
DIG +3.5V/DIG +5V REG (USB DRIVE) IC409, Q406-408 (DC-DC CONVERTER)	IC403 : EVER 3.5V REG IC407 : DIG +1.8V REG Q415,416, IC411 : DIG +1.8V REG IC412 : DIG +2.5V REG IC413 : DIG +3.5V REG IC414 : DIG +8V REG Q409-411, 414 : HDD +5V/+12V REG	IC403,Q407 :+8.5V(FAN DRIVE) Q401,402,404,IC404 : DIG +1.5V REG IC408 : DIG +1.8V REG IC410 : DIG +2.5V REG

AC12V IN
SYSTEM POWER SUPPLY

RF-AMP
CN108
POWER SW
OPEN/CLOSE SW
SW-350

Reproduction Prohibited

SECTION 4
PRINTED WIRING BOARDS AND SCHEMATIC DIAGRAMS

THIS NOTE IS COMMON FOR PRINTED WIRING BOARDS AND SCHEMATIC DIAGRAMS.

Note on Printed Wiring Boards :
- Through hole is omitted.
- ▭ : Pattern on the side which is seen.

Note on Schematic Diagram :
- Use caution when replacing chip parts.
  New parts must be attached after removal of chip.
  Be careful not to heat the minus side of tantalum capacitor, because it is damaged by the heat.
- All capacitors are in µF unless otherwise noted. pF : µµF 50 WV or less are not indicated except for electrolytics and tantalums.
- All resistors are in Ω and 1/4 W (Chip resisters : 1/10W) unless otherwise specified.
- Chip resistors are 1/8 W or 1/10 W unless otherwise noted.
  kΩ : 1000Ω, MΩ : 1000 kΩ.

Note : The components identified by mark ⚠ or dotted line with mark ⚠ are critical for safety. Replace only with part number specified.	**Note :** Les composants identifies par une marque ⚠ sont critiques pour la securite. Ne les remplacer que par une piece portant le nubero specifie.

Note on DC Power line :
- +12V :
- +8.0V :
- +5.0V :
- +3.5V :
- +3.4V :
- +3.3V :
- +2.5V :
- +1.8V :
- +1.7V :
- +1.5V :
- IN :
- OUT :
- Main Signal Line : ,

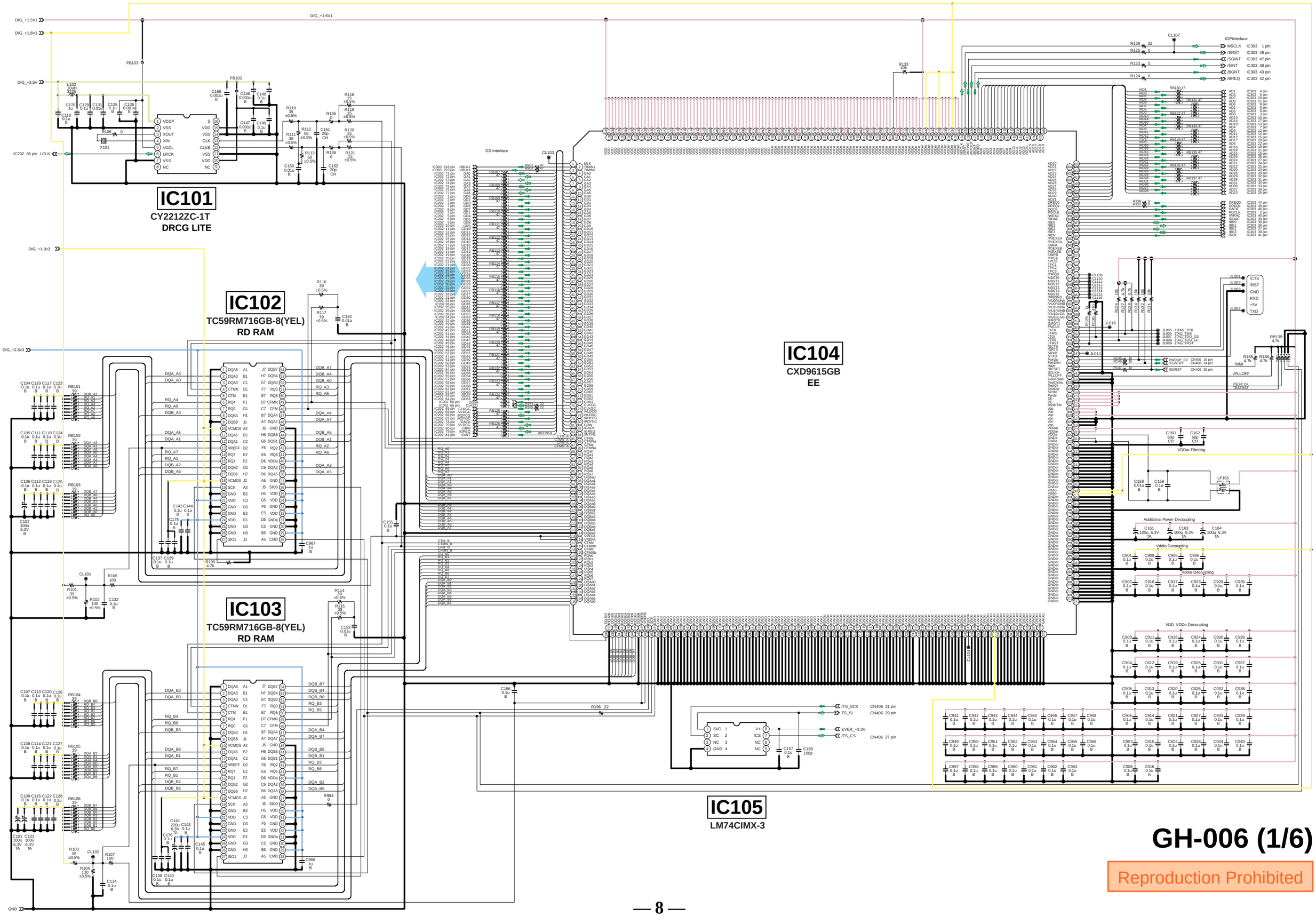

GH-006 (1/6)

Reproduction Prohibited

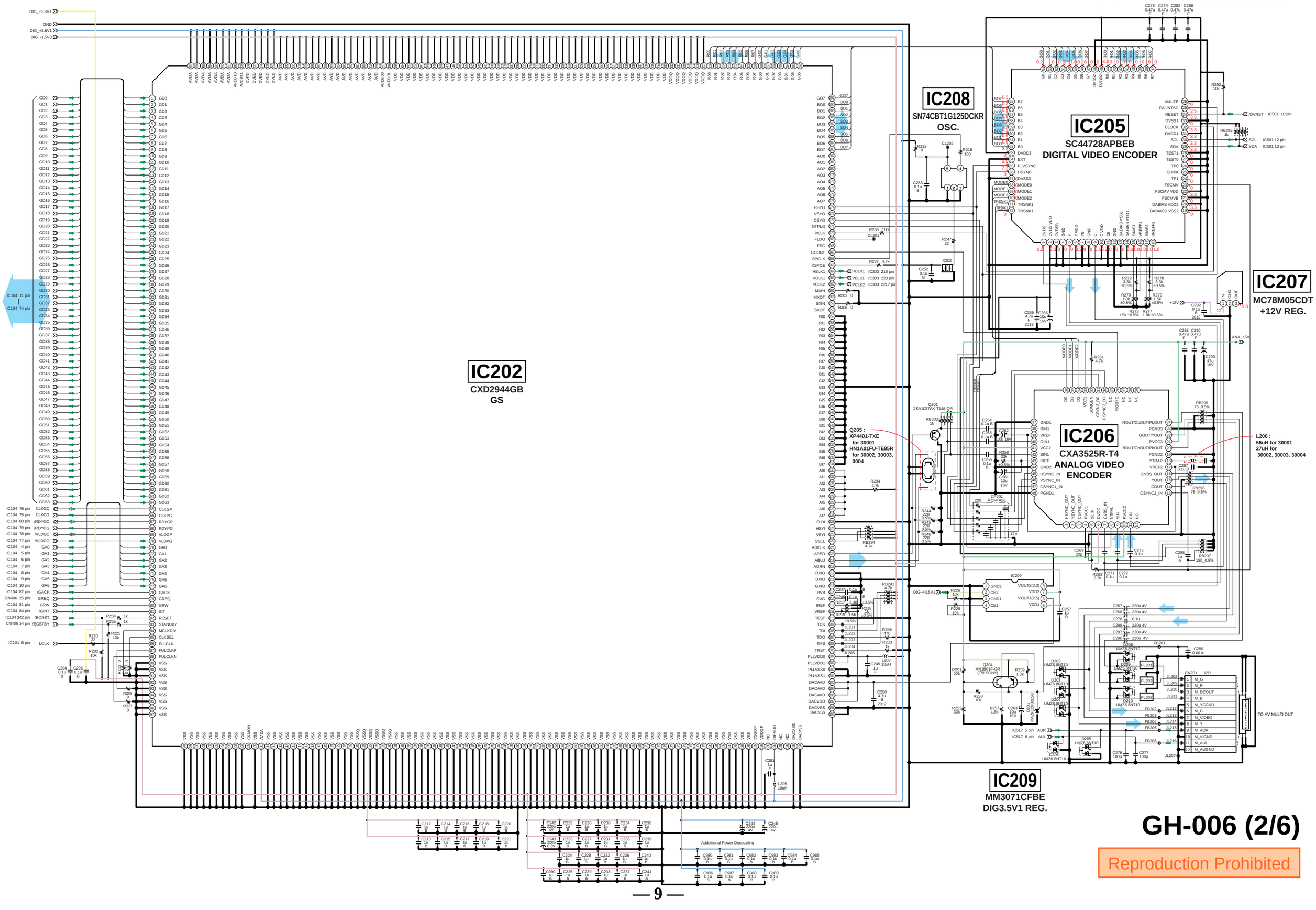

GH-006 (2/6)

Reproduction Prohibited

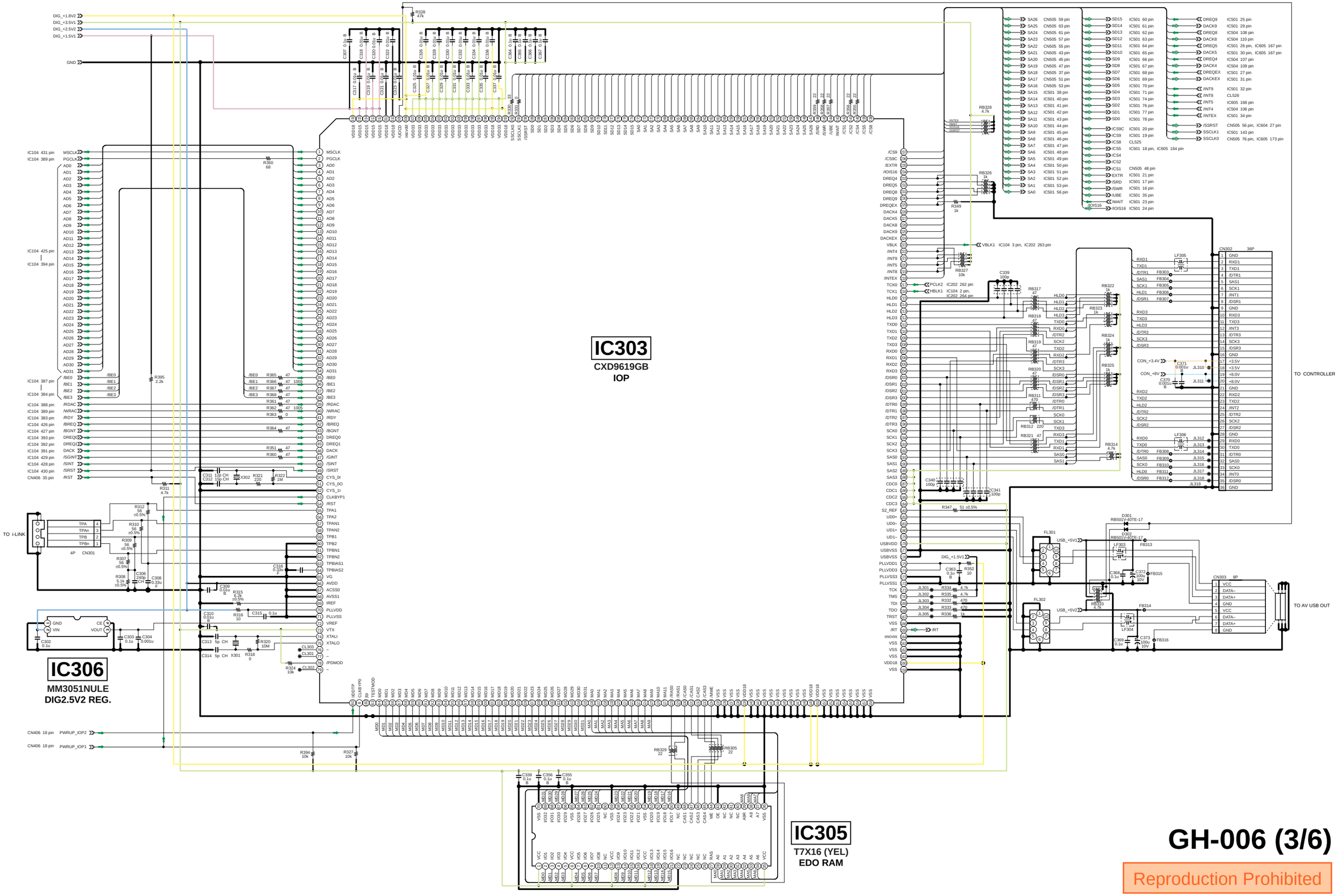

GH-006 (3/6)
Reproduction Prohibited

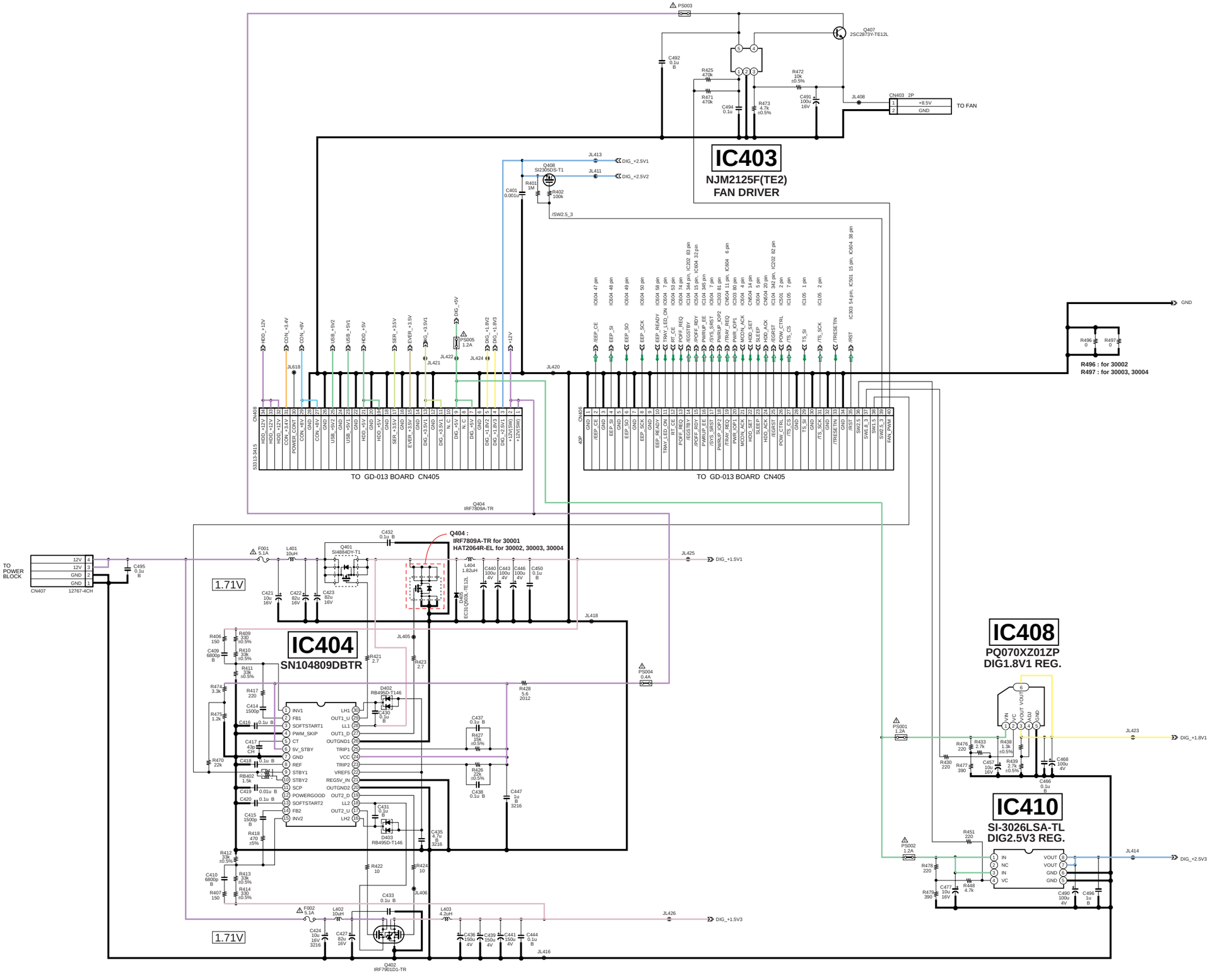

GH-006 (4/6)

Reproduction Prohibited

IC518 : for GH-006-11

IC518
TC7WB125FK 9TE85R)

C526, C543, R527 :
for GH-006-11 (30001) and
GH-006-21 (30002, 30003, 30004)

IC503
MR27V3202E-25TPZ020 : for GH-006-11 (30002, 30003, 30004)
MR27V1602E-23TPZ020 : for GH-006-11 (30001)

IC506 MR27V1602E-44TPZ020 : for GH-006-11 (30002)
MR27V1602E-45TPZ020 : for GH-006-11 (30003, 30004)
MR27V3202E-24TPZ020 : for GH-006-21 (30001)

IC503
MRBOOT ROM

IC506
MR2DVD ROM

IC502
SDMN18165CTM6S
DRAM

IC504
CXD2942AR
SPU2

IC505
TC5364200FT-UC120 : for GH-006-21 (30001)
TC5364200FT-AU120 : for GH-006-21 (30002)
TC5364200FT-AE120 : for GH-006-21 (30003, 30004)
DVD/BOOT ROM

C512, C505 :
for GH-006-11 (30002, 30003, 30004)
and GH-006-21 (30001)

IC501
CXD9611R
HDD CONTROLLER

IC517
CS4335-KS
AUDIO DUC

GH-006 (5/6)

Reproduction Prohibited

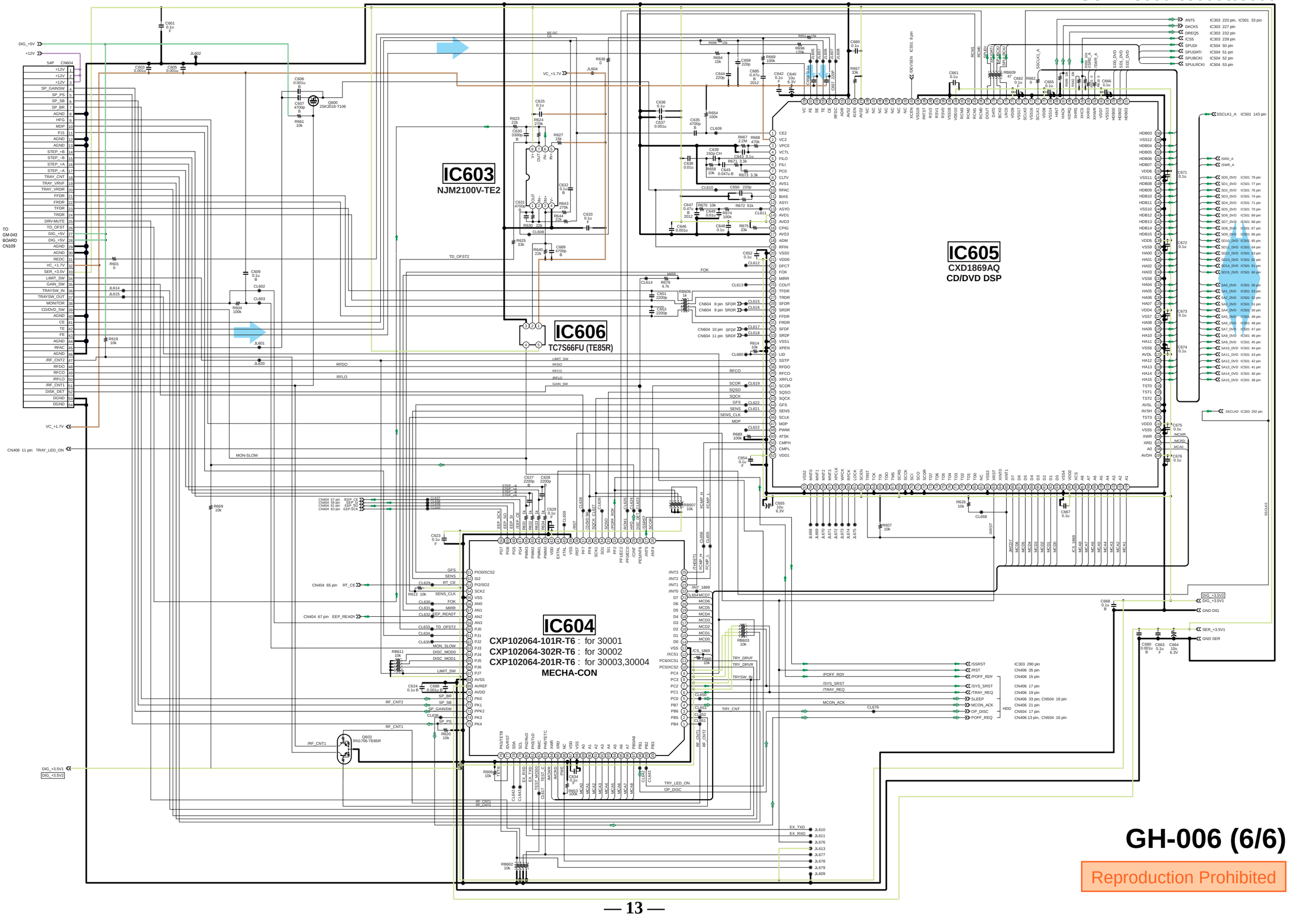

Reproduction Prohibited

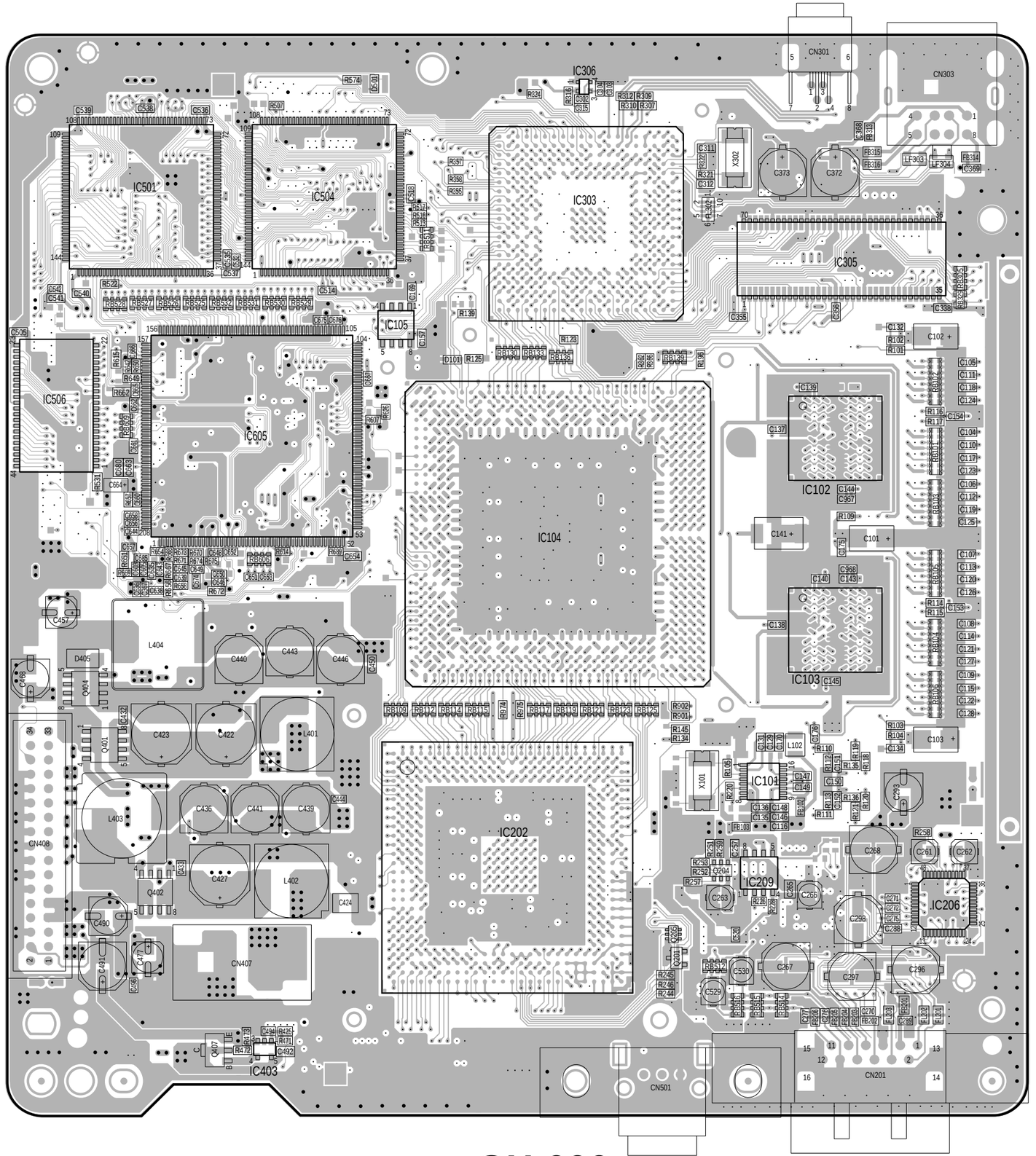

GH-006

A side

Reproduction Prohibited

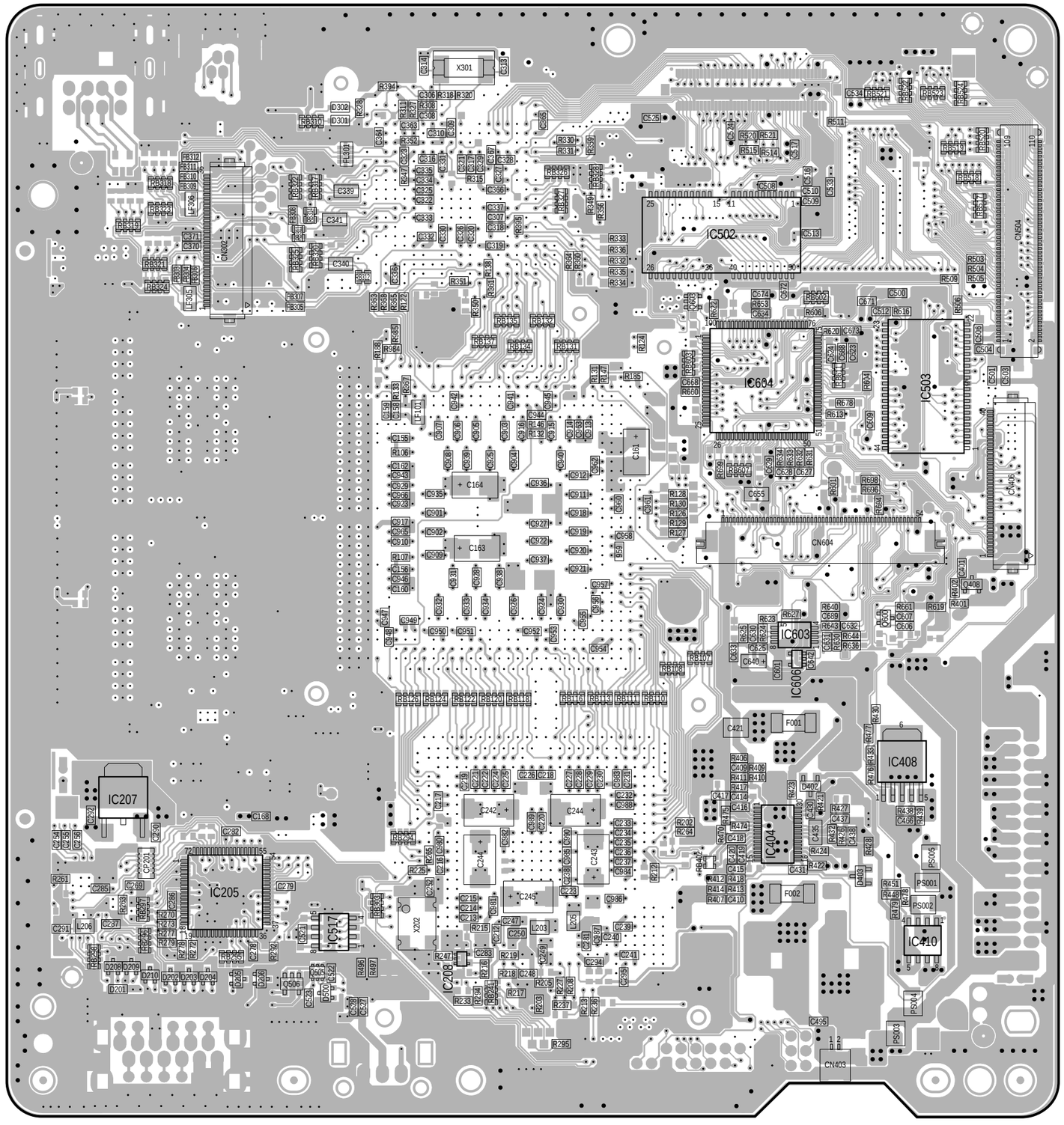

GH-006

B side

Reproduction Prohibited

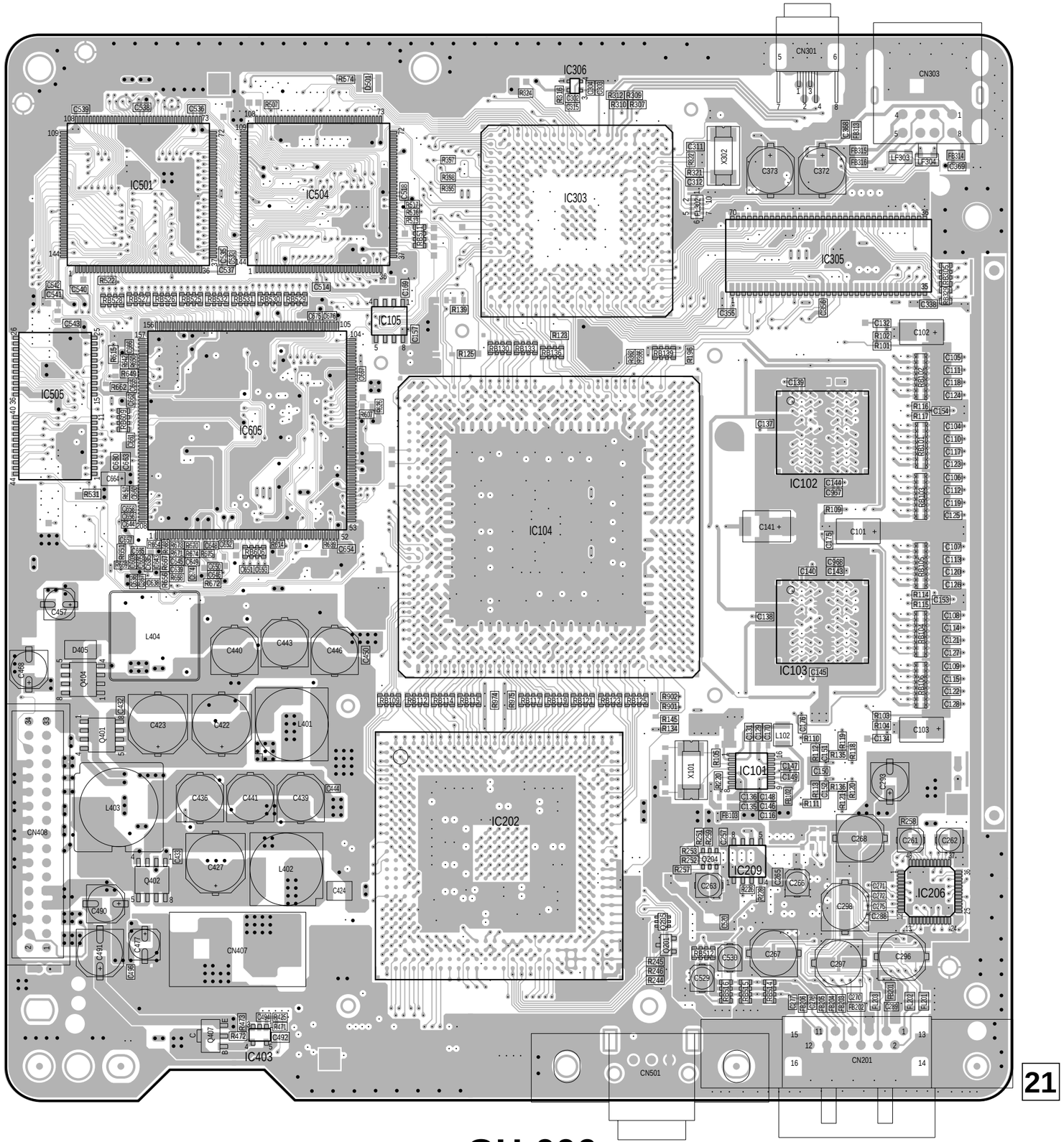

GH-006

A side

Reproduction Prohibited

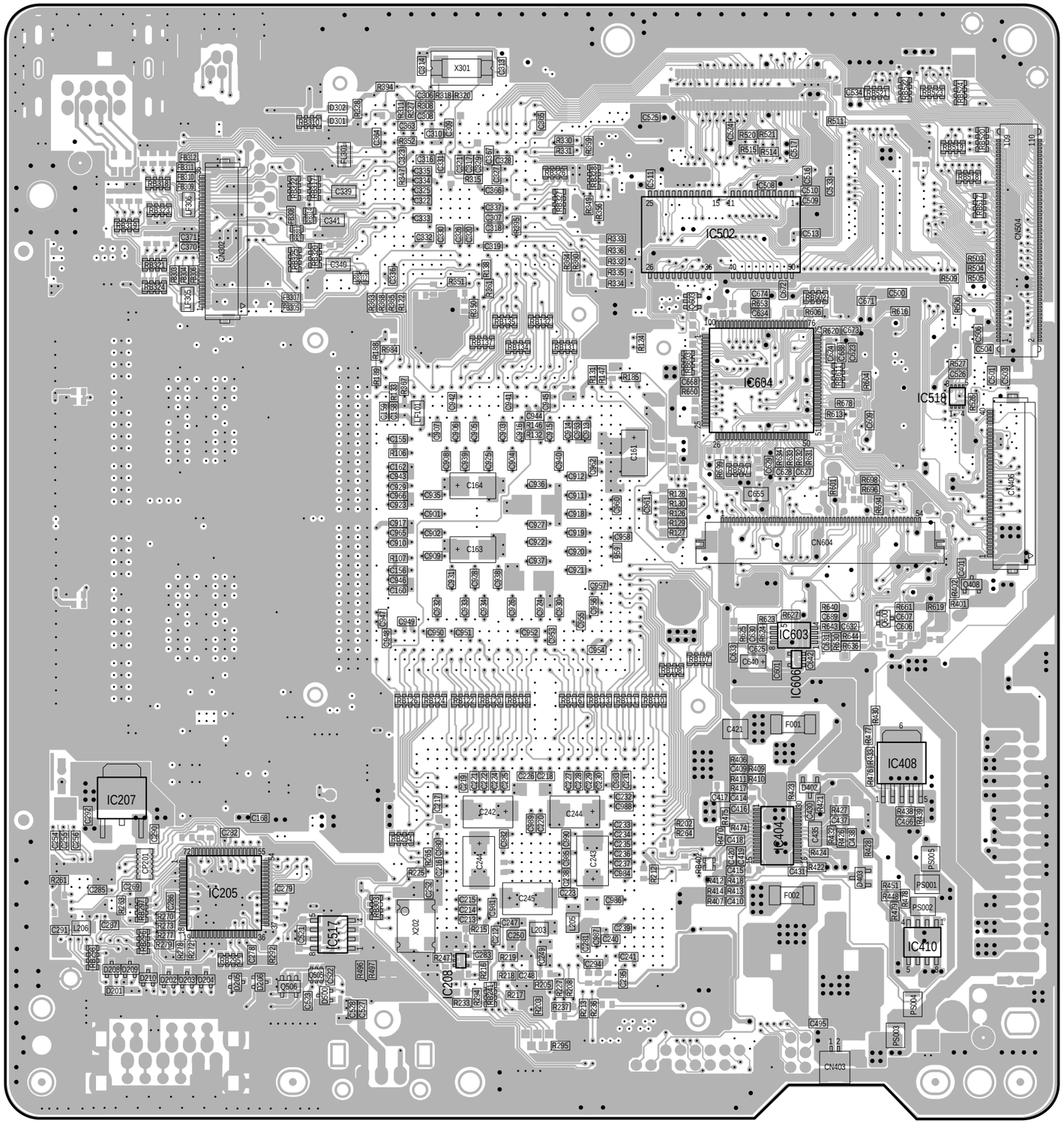

GH-006

B side

Reproduction Prohibited

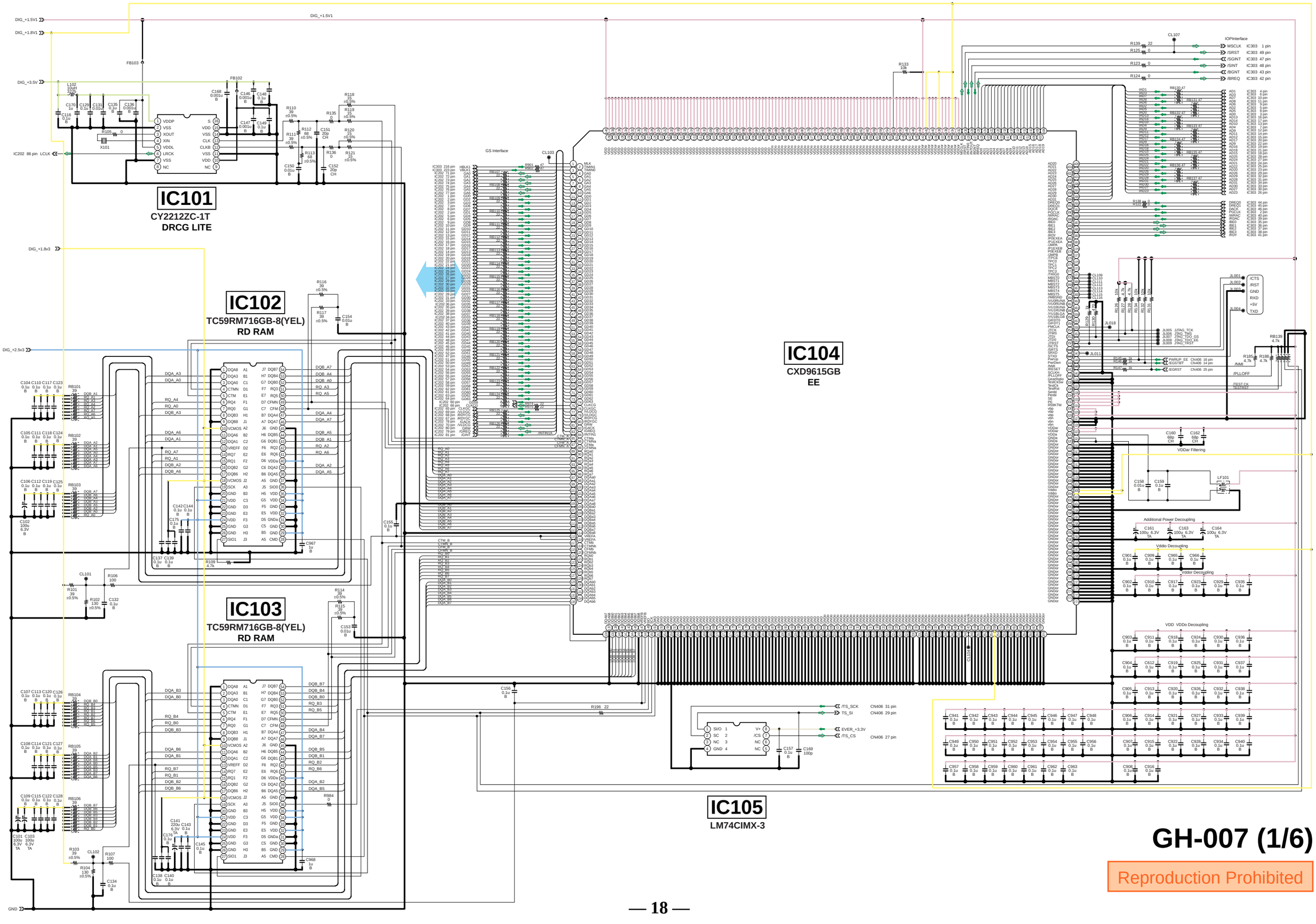

GH-007 (1/6)

Reproduction Prohibited

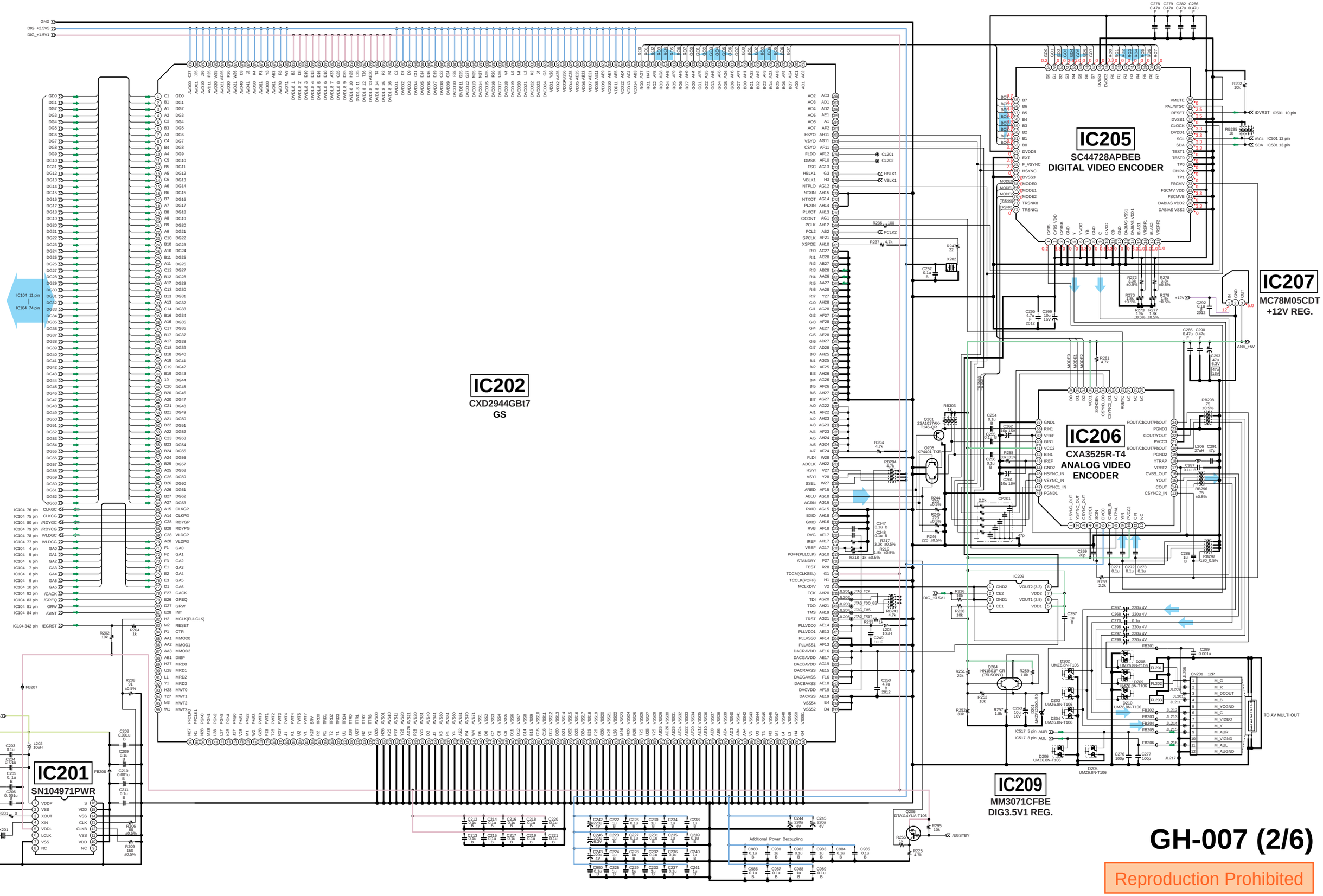

GH-007 (2/6)

Reproduction Prohibited

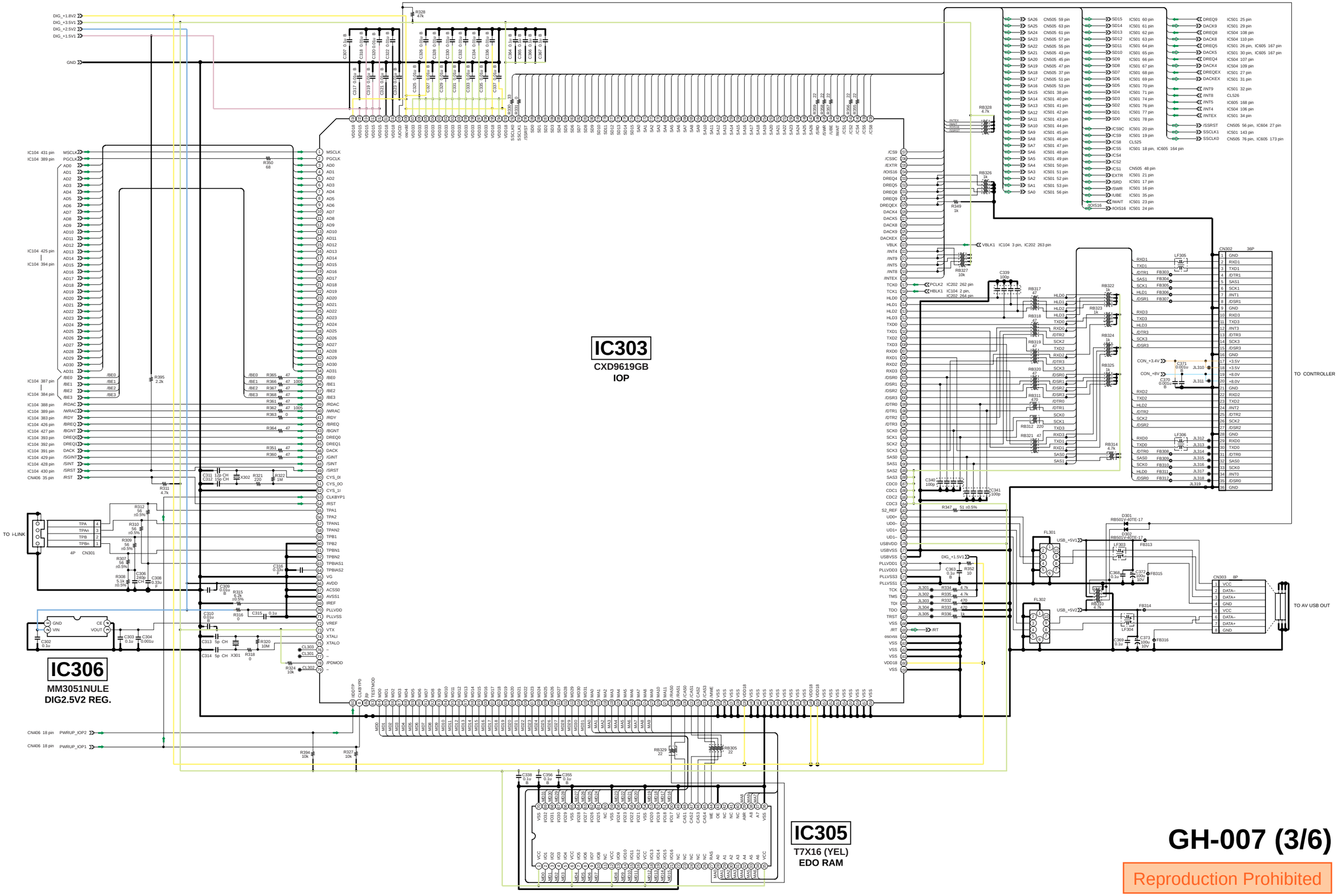

GH-007 (3/6)
Reproduction Prohibited

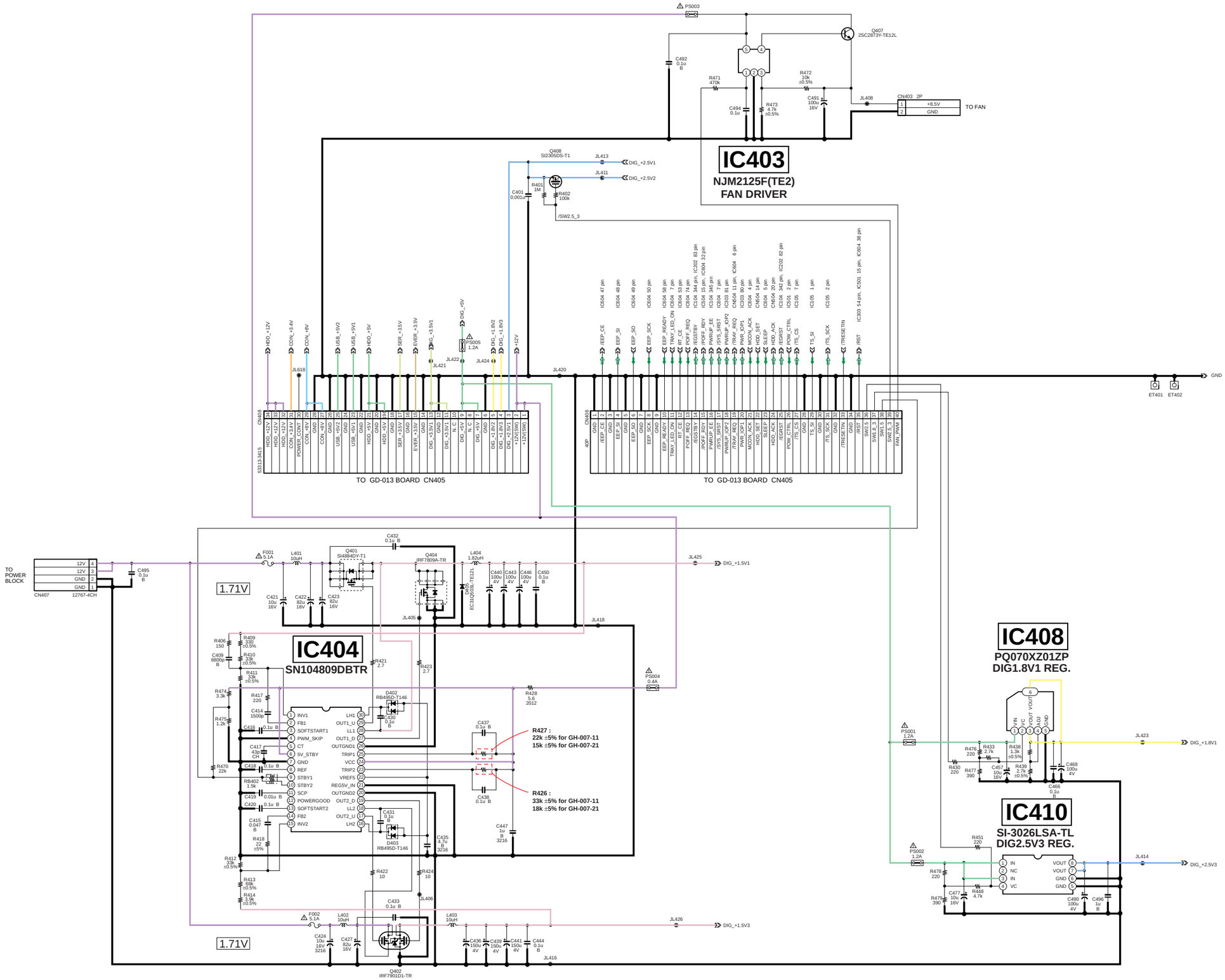

Reproduction Prohibited

IC518
IC518 : for GH-007-21
C526, R527 : for GH-007-21 (30002)
TC7WB125FK (TE85R)

IC503 MR27V3202E-25TPZ020 : for GH-007-11
IC506 MR27V1602E-45TPZ020 : for GH-007-11 (30002)
MR27V1602E-44TPZ020 : for GH-007-11 (30003, 30004)

IC503
MRBOOT ROM

IC506
MR2DVD ROM

IC502
SDMN18165CTM6S
DRAM

IC504
CXD2942AR
SPU2

IC505
TC5364200FT-AV120 : for GH-007-21 (30002)
TC5364200FT-AE120 : for GH-007-21 (30003, 30004)
DVD/BOOT ROM

C505, C512 : for GH-007-11 (30002)

IC501
CXD9611R
HDD CONTROLLER

IC517
CS4335-KS
AUDIO DUC

GH-007 (5/6)

Reproduction Prohibited

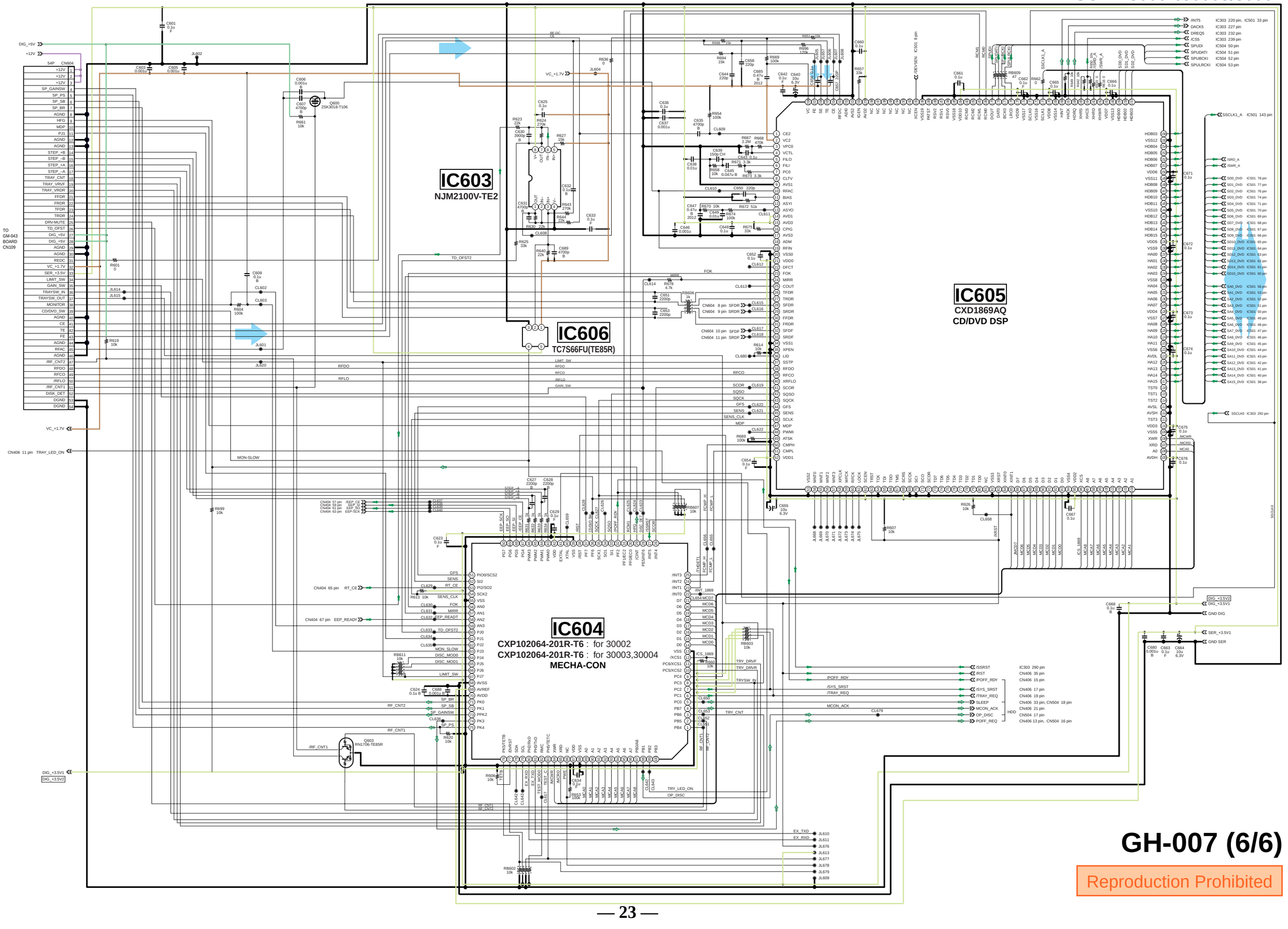

GH-007 (6/6)

Reproduction Prohibited

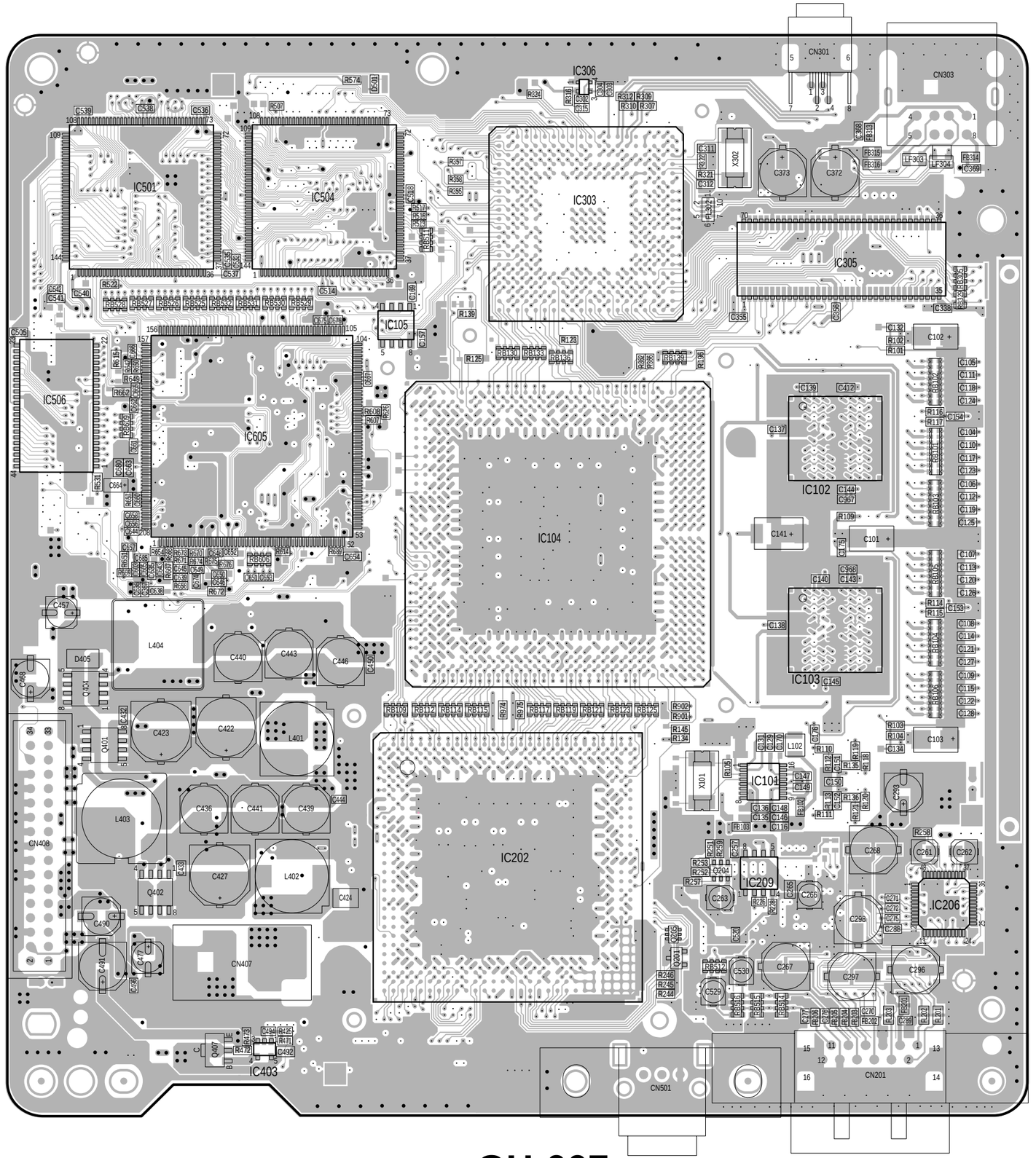
IC306
CN301
CN303
IC501
IC504
IC303
IC305
IC105
IC506
IC605
IC104
IC102
IC103
IC202
IC209
IC206
IC403
IC104
CN408
CN407
CN501
CN201
L404
L401
L403
L402
D405
X302
X101
C373
C372
C440
C443
C446
C423
C422
C436
C441
C439
C427
C424
C490
C491
C492
C530
C529
C267
C297
C296
C268
C261
C262
C263
C265
C266
C298
C102
C103
C101
C141
C139
C412
C137
C140
C143
C138
C145
C144
C967
C968
C131
C129
C170
C178
L102
C147
C149
C150
C148
C135
C136
C146
C116
C355
C356
C338
C132
C102
R102
R101
C105
C111
C118
C124
C154
C104
C110
C117
C123
C106
C112
C119
C125
C107
C113
C120
C126
C153
C108
C114
C121
C127
C109
C115
C122
C128
C311
C327
C321
C312
C315
C318
C369
FB315
FB316
FB314
LF303
LF304
C505
C539
C538
C536
C537
C540
C541
C542
C514
C108
C157
C139
C505
R574
R501
R507
R324
R312
R309
R310
R307
R367
R368
R355
R522
R139
R123
R125
R196
R902
R901
R145
R134
R109
R104
R114
R115
R258
R259
R257
R246
R245
R244
R201
R202
R203
R204
R205
R206
R207
R208
R209
R210
R211
R212
R213
R214
R215
R216
R217
R218
R219
R220
R221
R222
R223
R224
R225
R226
R227
R228
R229
R230
R231
R232
R233
R234
R235
R236
R237
R238
R239
R240

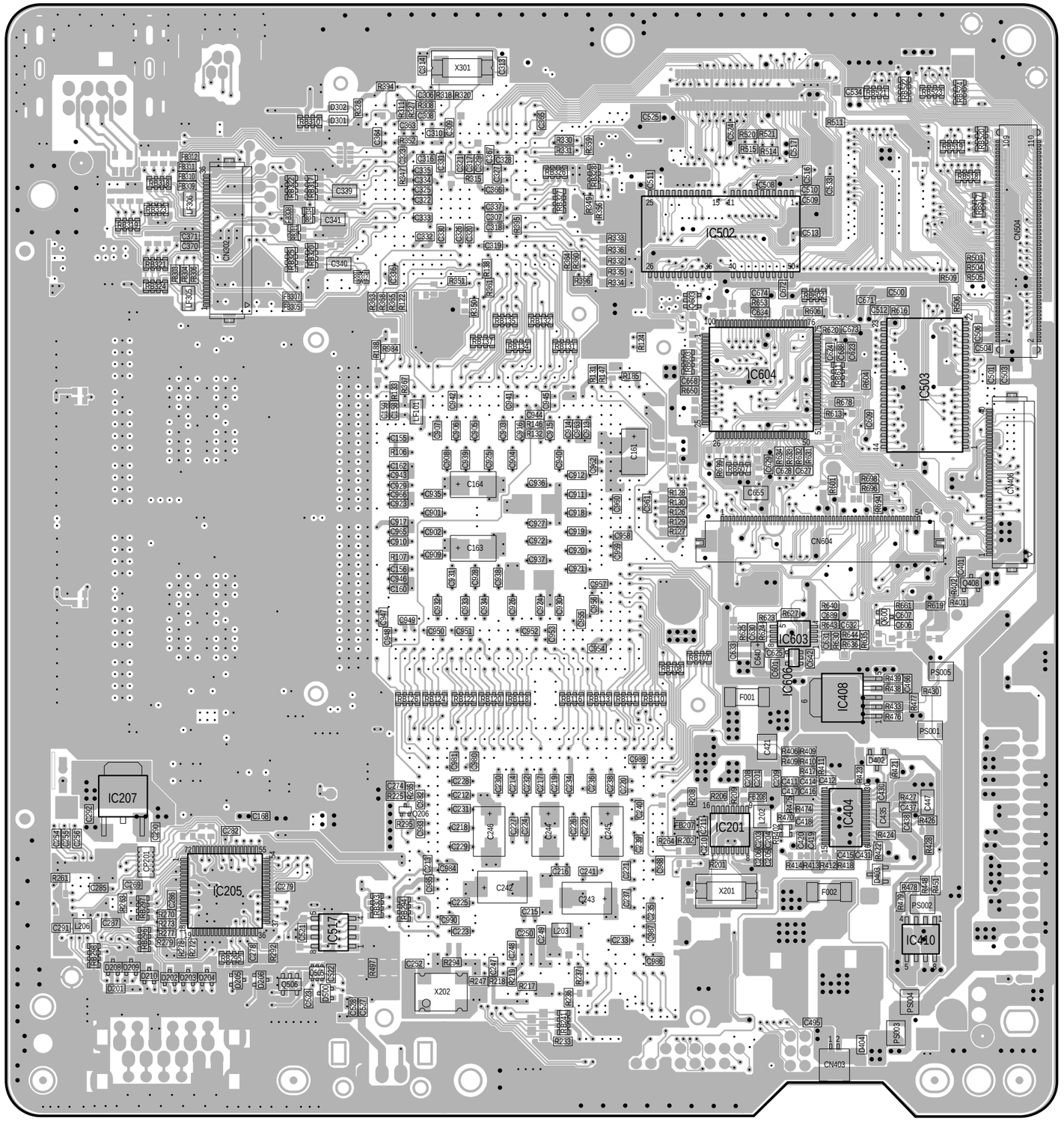

11

GH-007

B side

Reproduction Prohibited

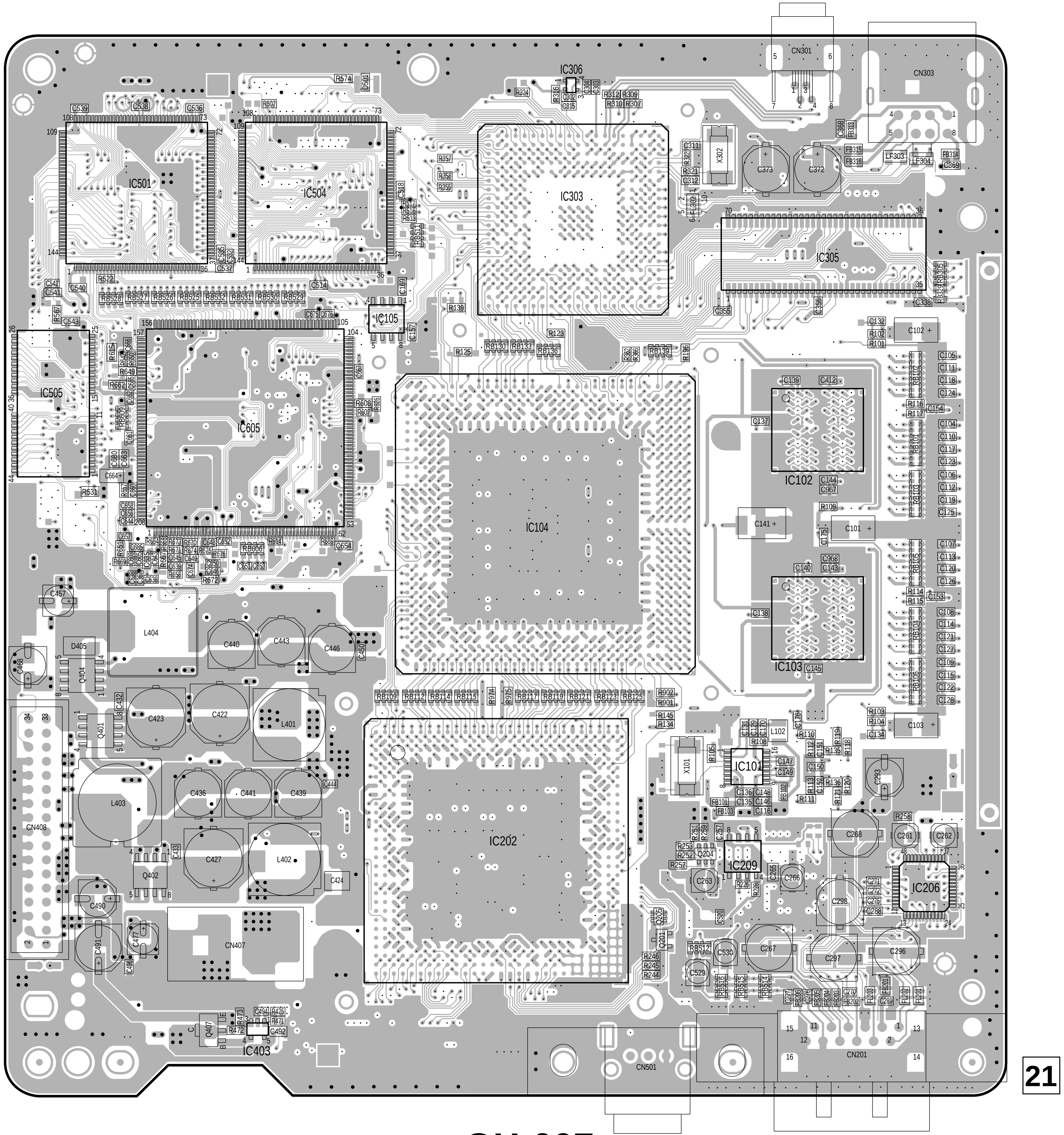

GH-007

A side

Reproduction Prohibited

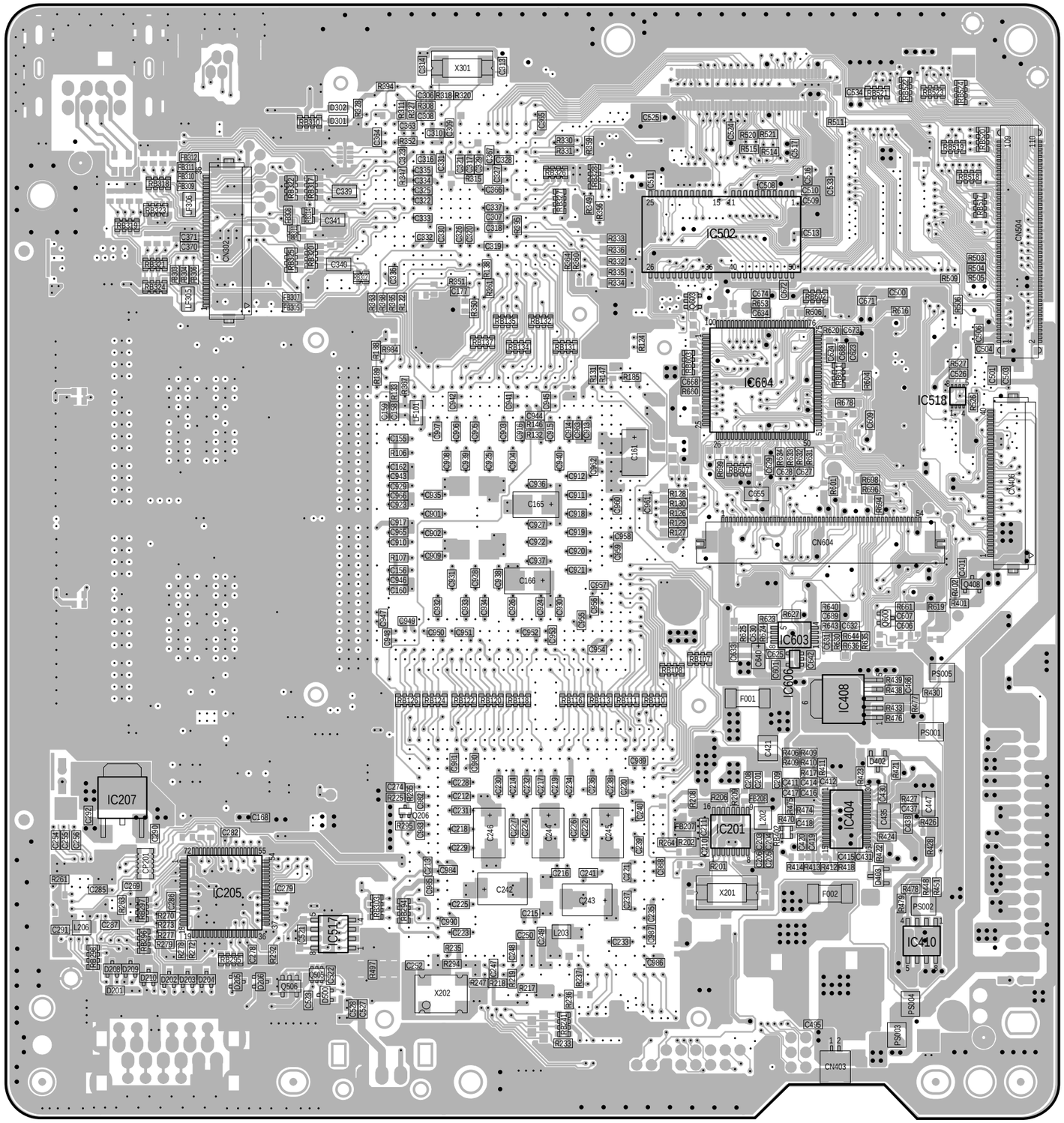

21

GH-007

B side

Reproduction Prohibited

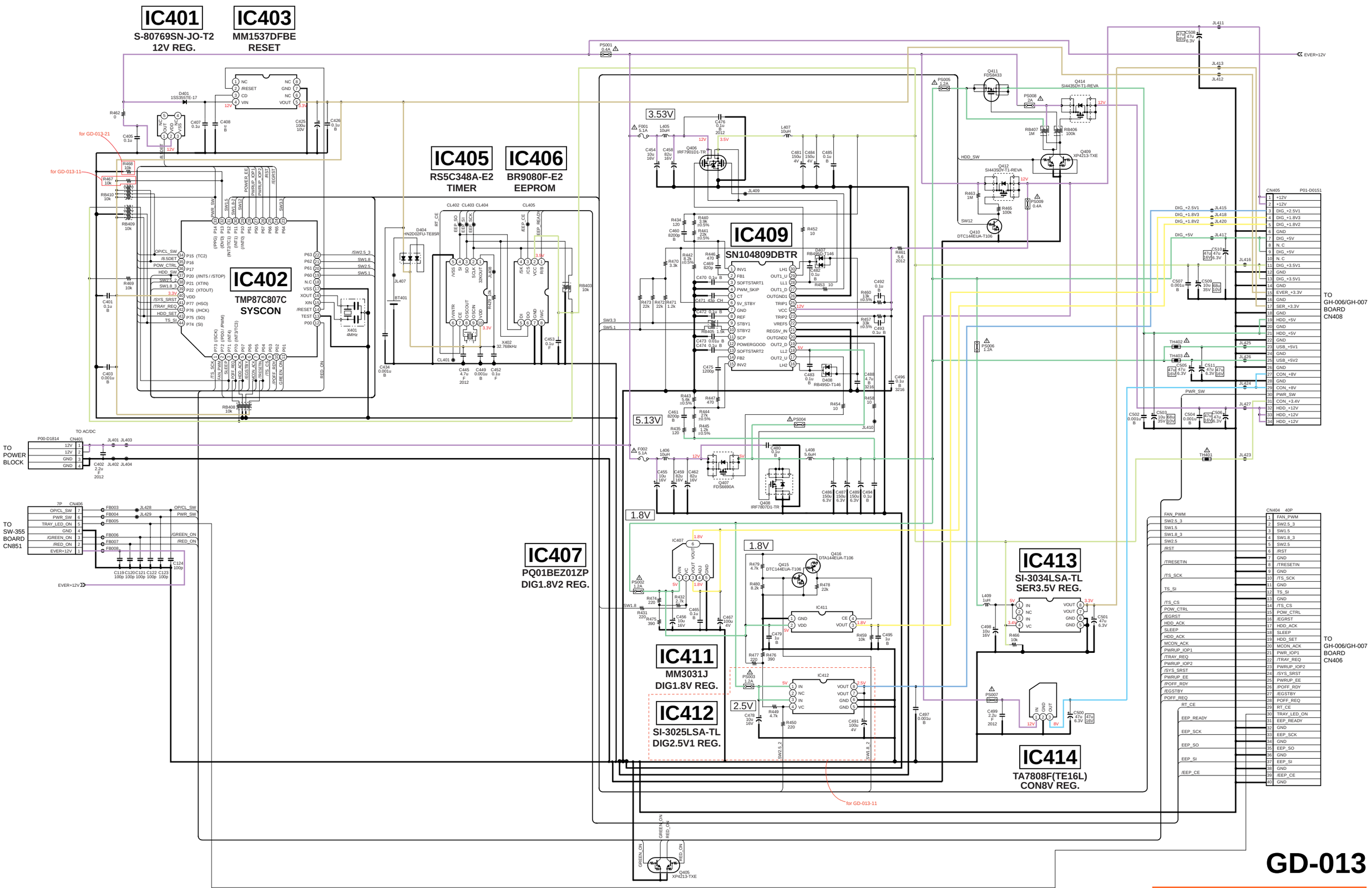

GD-013

Reproduction Prohibited

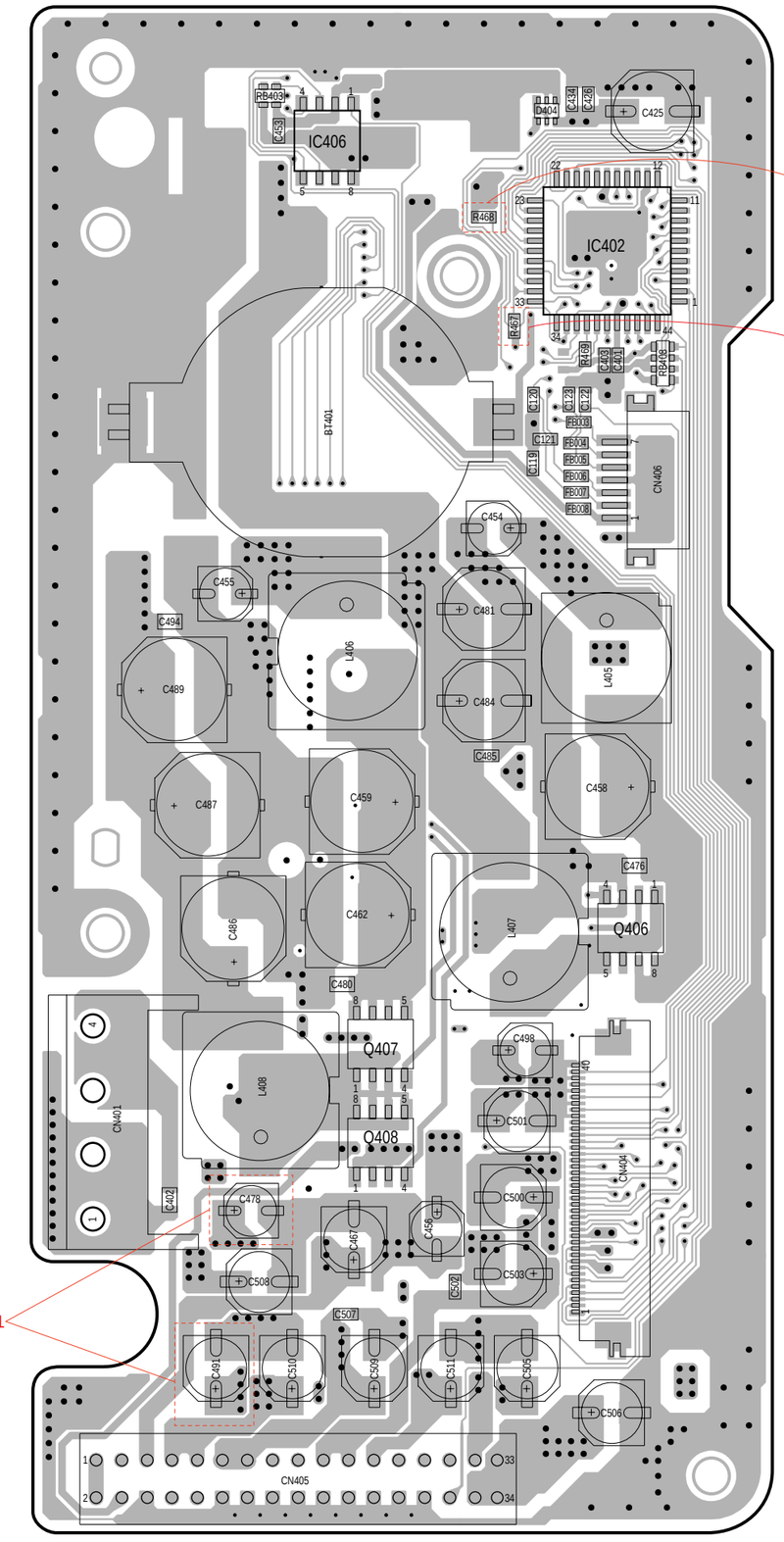

GD-013

A side

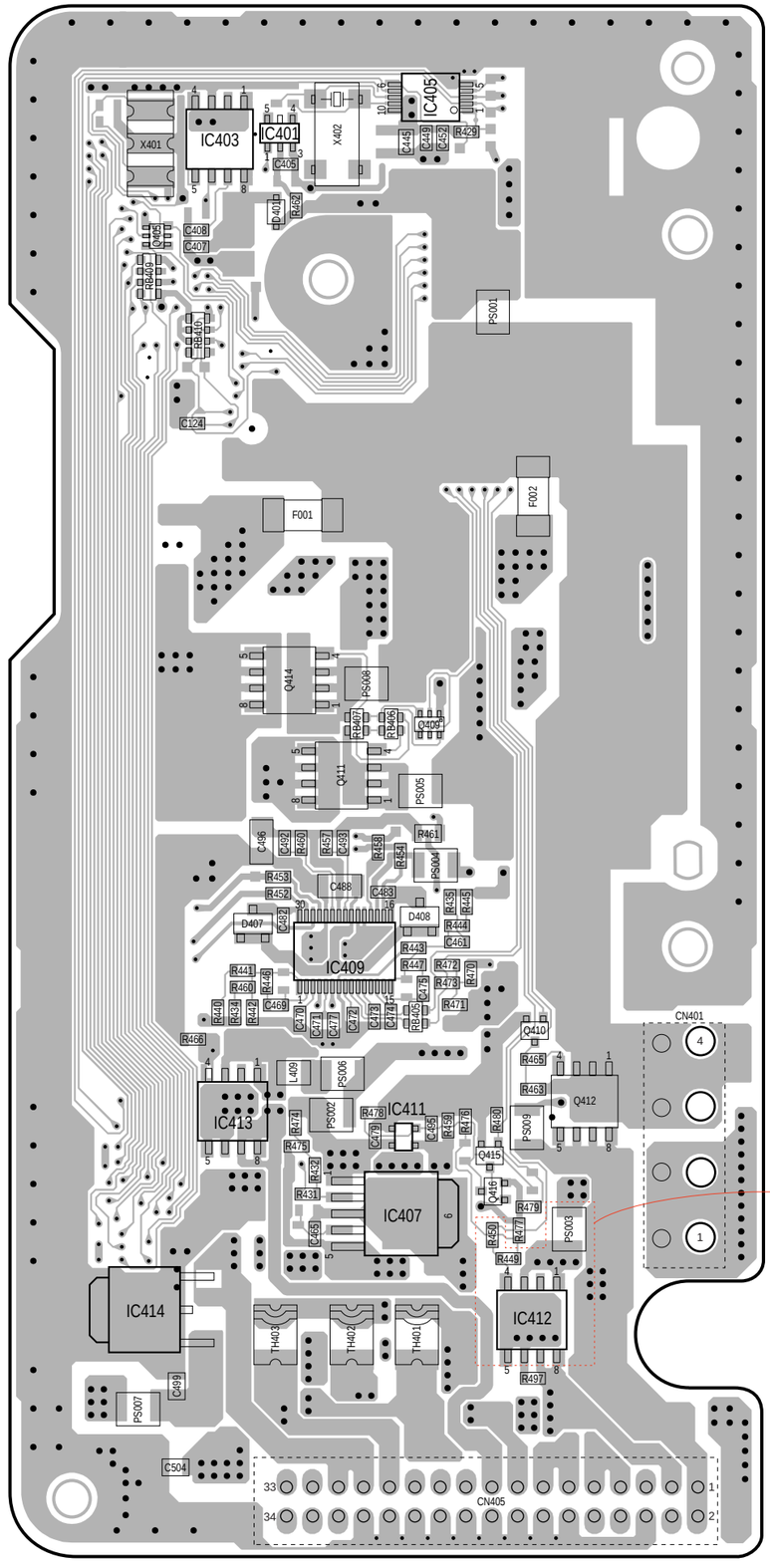

GD-013

B side

Reproduction Prohibited

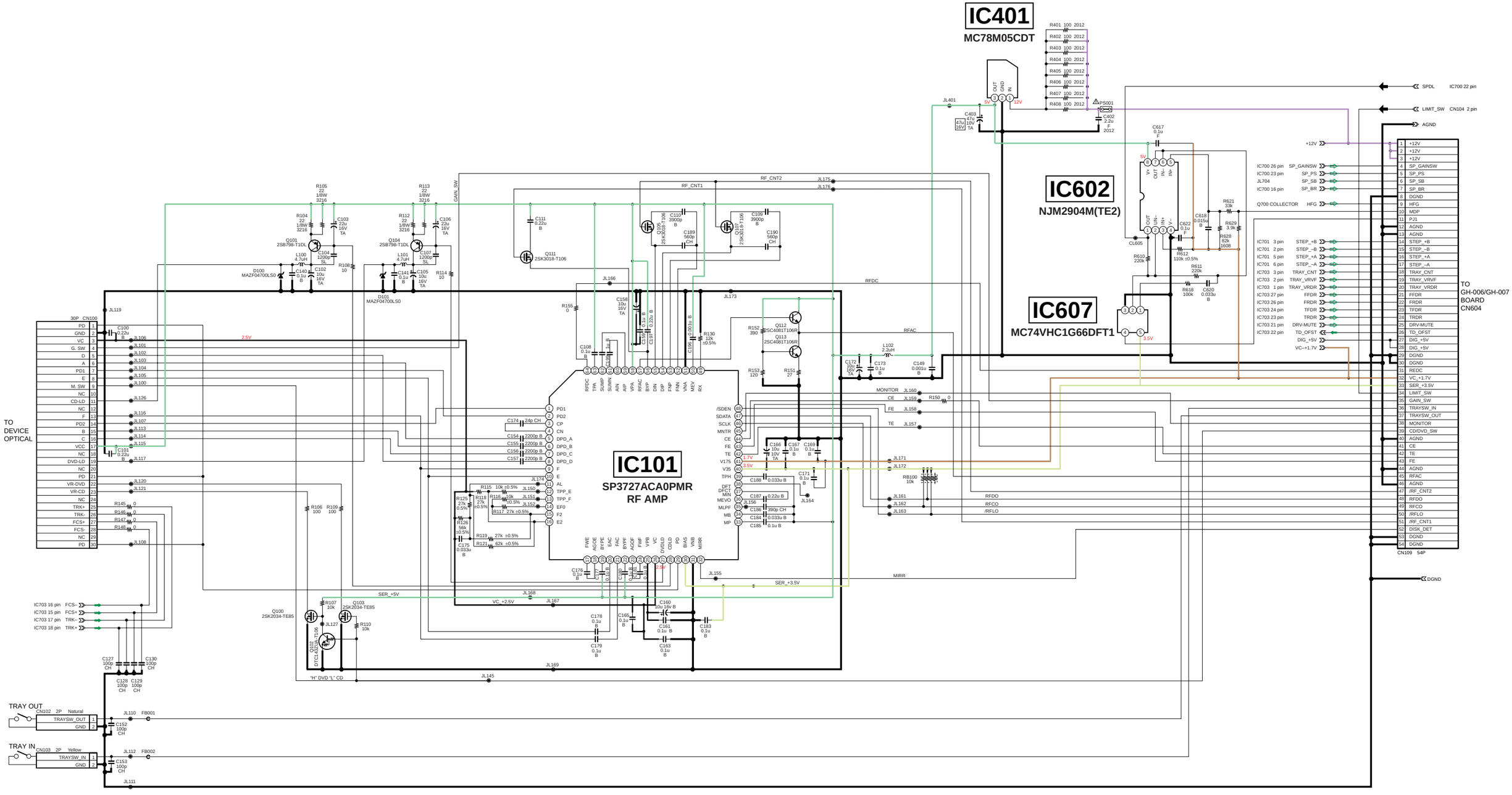

GM-043 (1/2)

Reproduction Prohibited

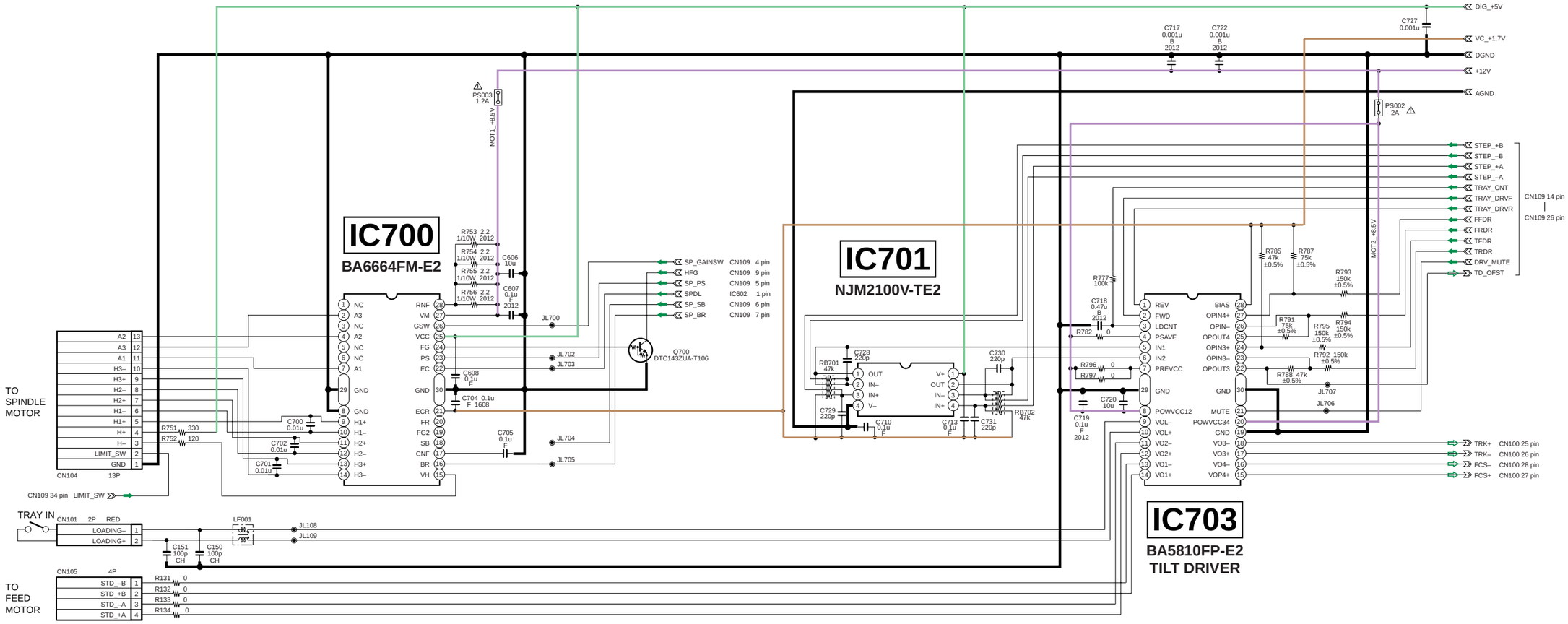

GM-043 (2/2)

Reproduction Prohibited

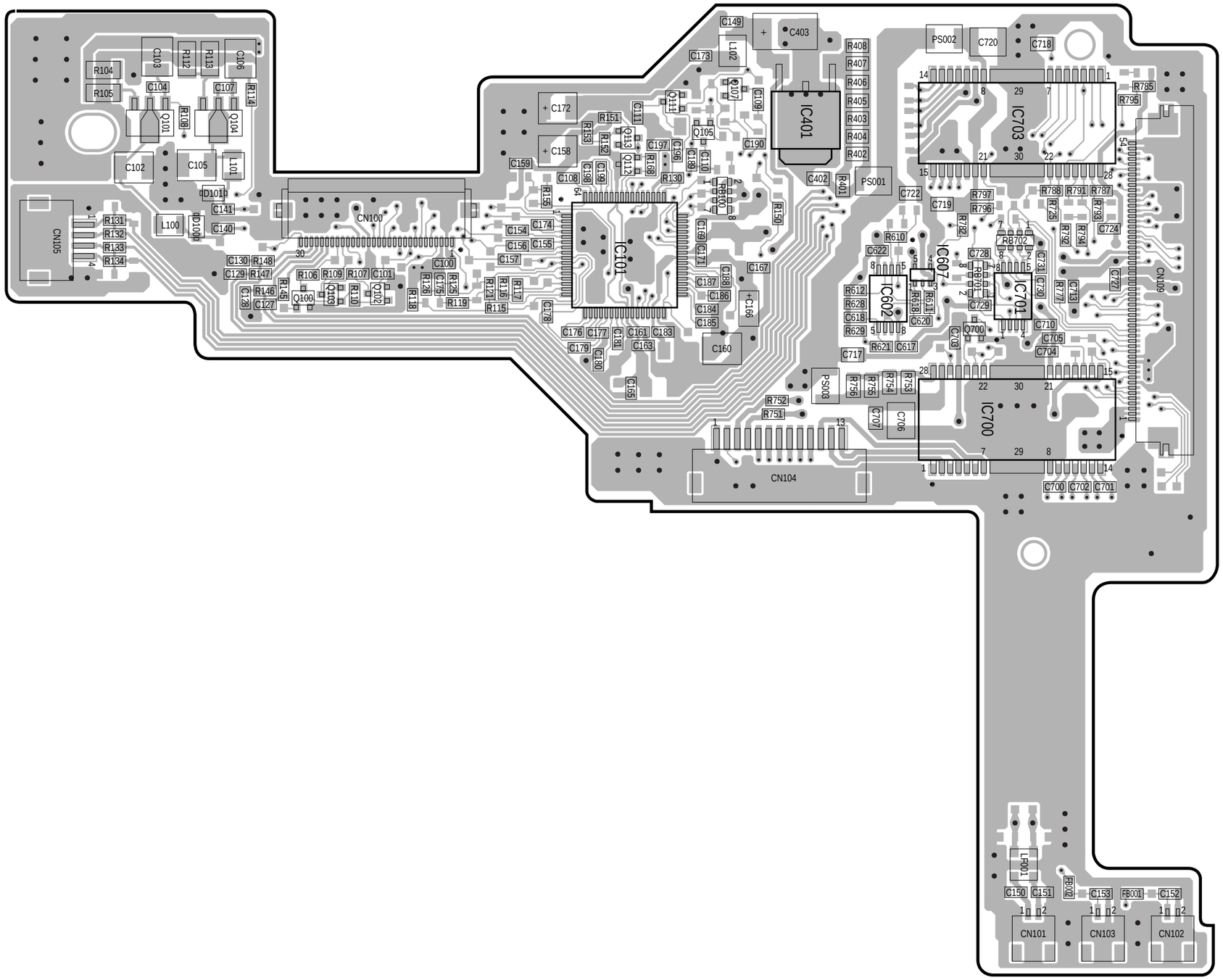

GM-043

B side

Reproduction Prohibited

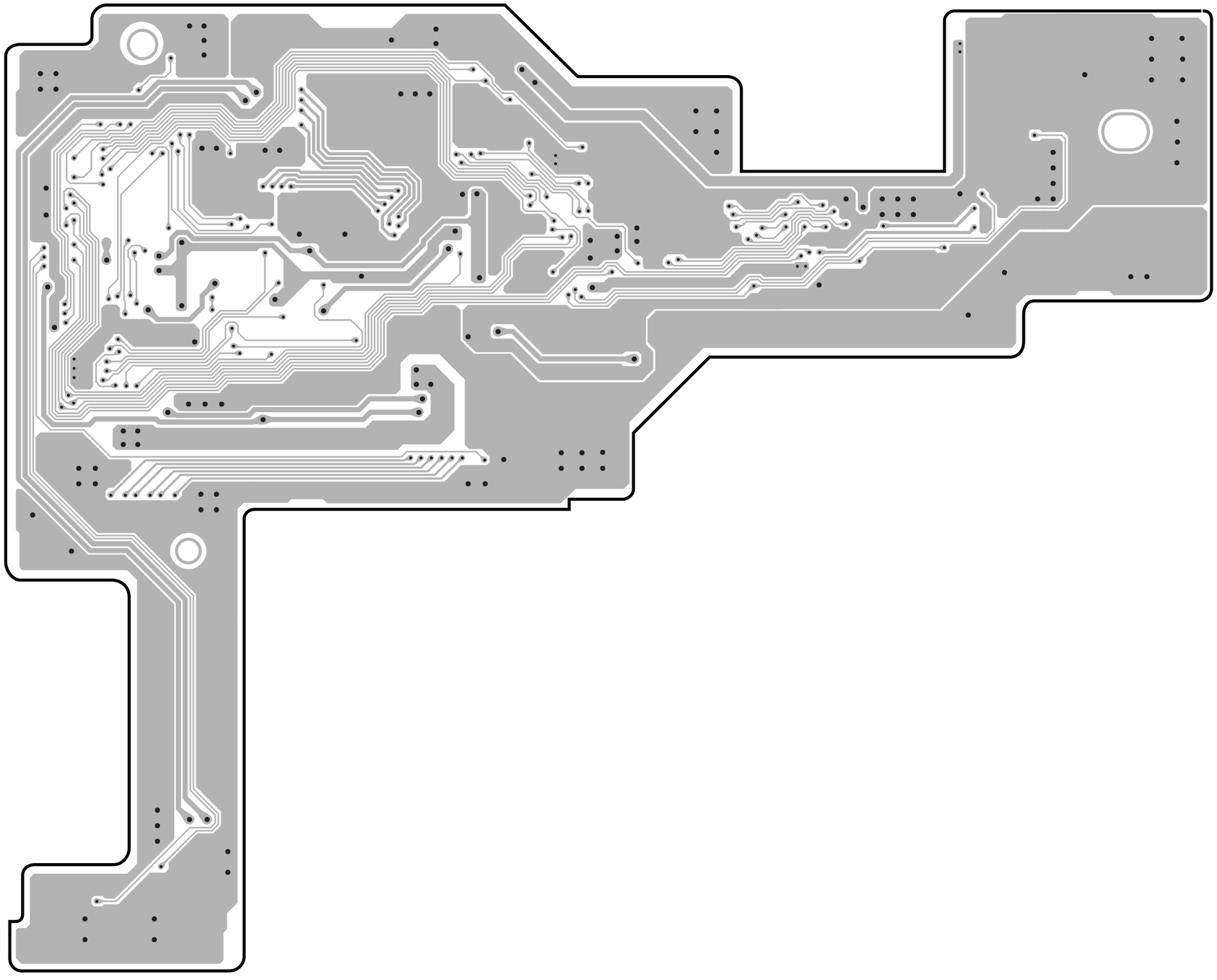

GM-043

A side

Reproduction Prohibited

GI side

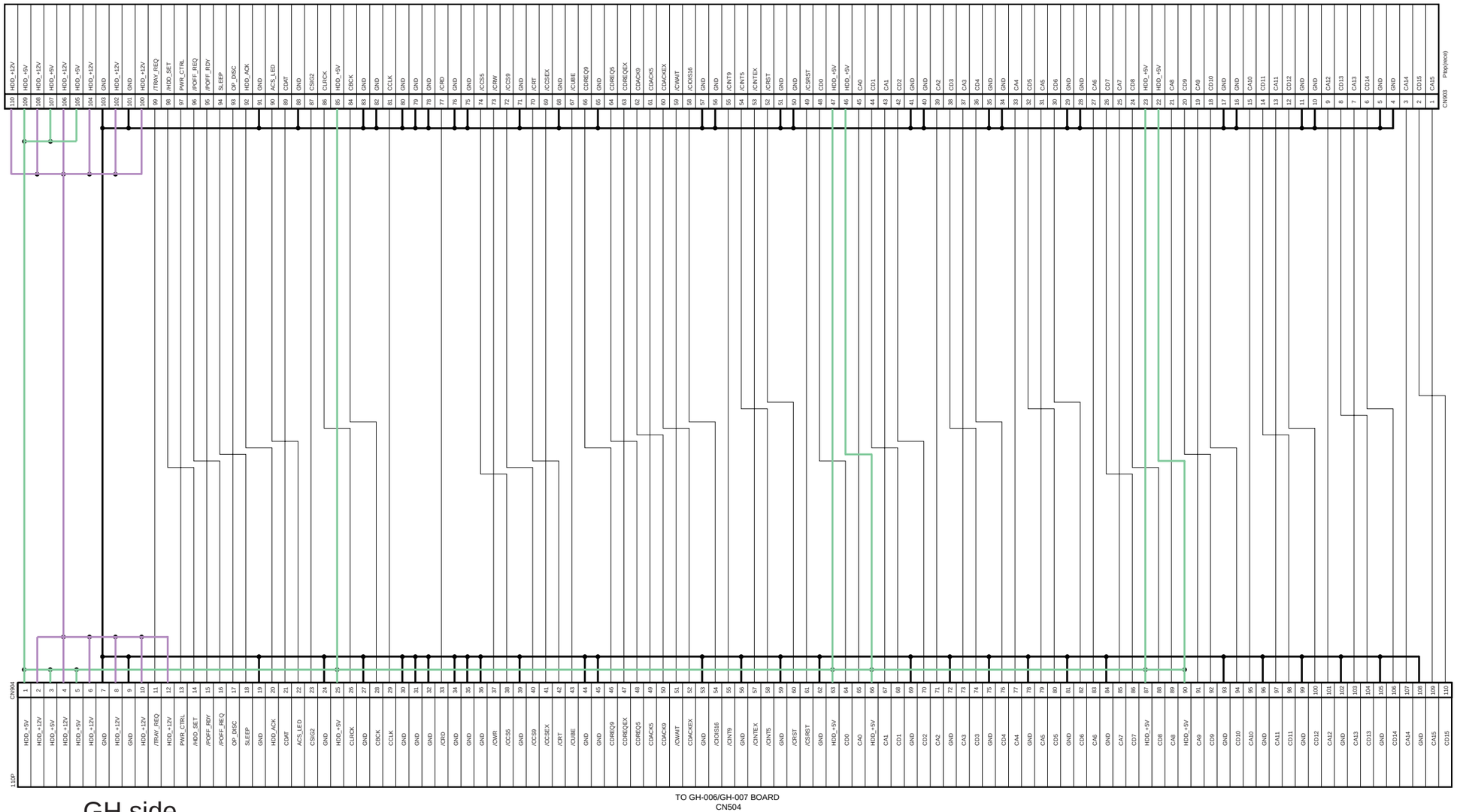

GH side

GI-006

Reproduction Prohibited

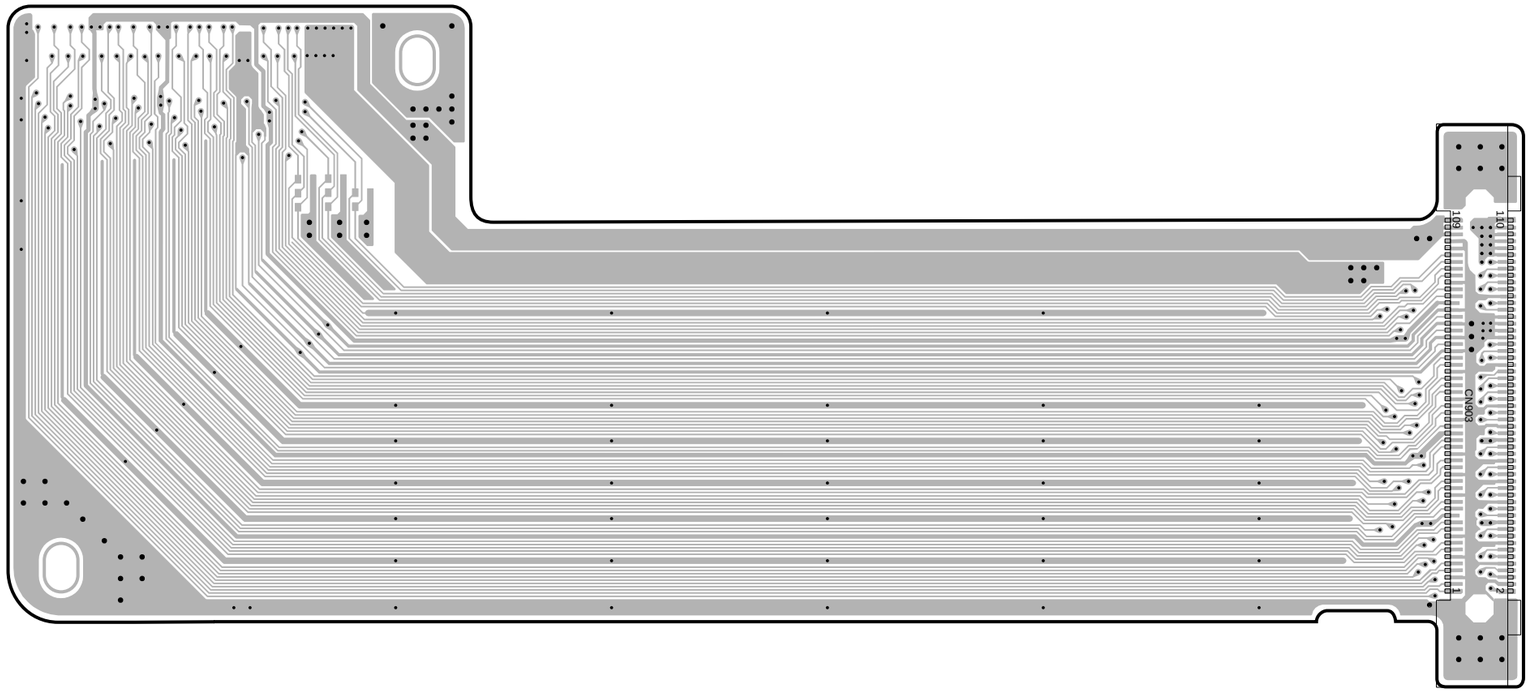

GI-006

A side

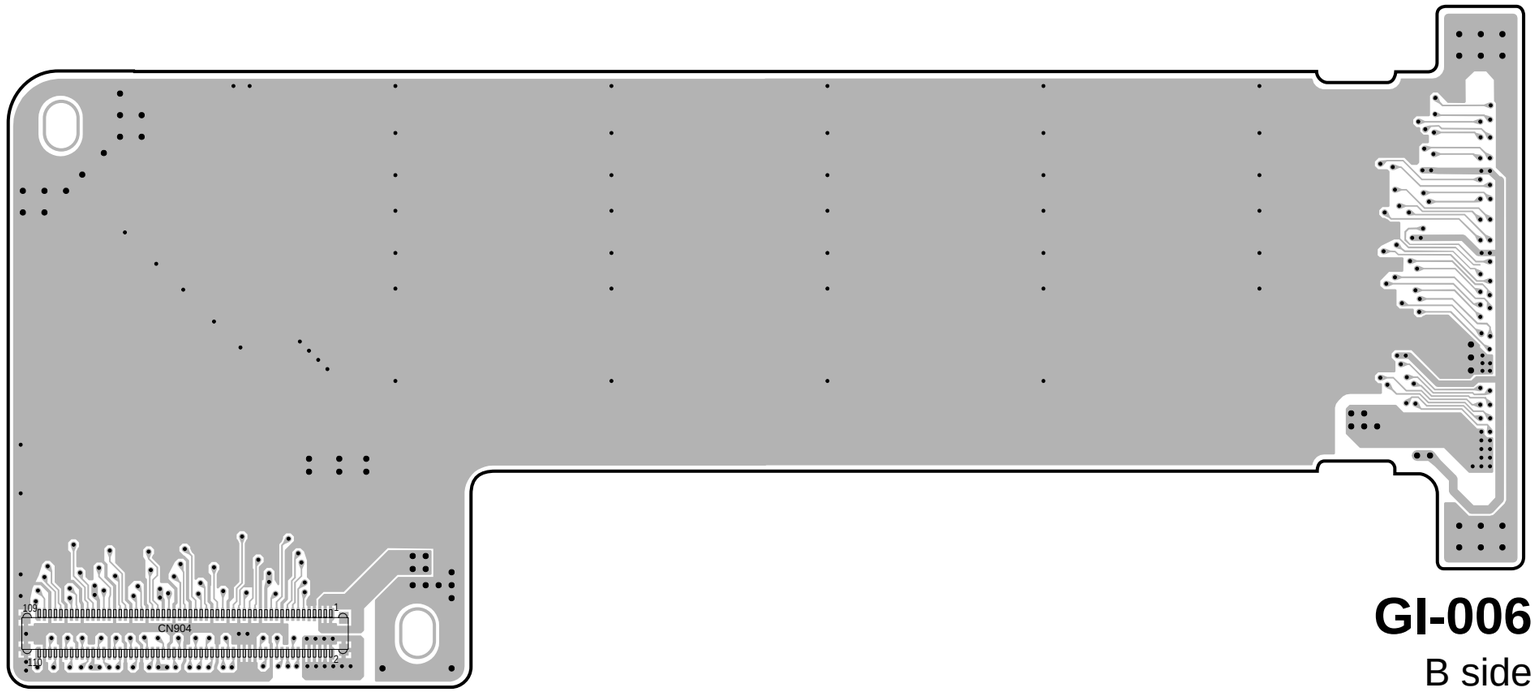

GI-006

B side

Reproduction Prohibited

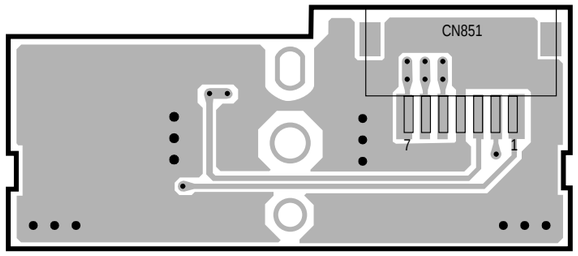

SW-355

A side

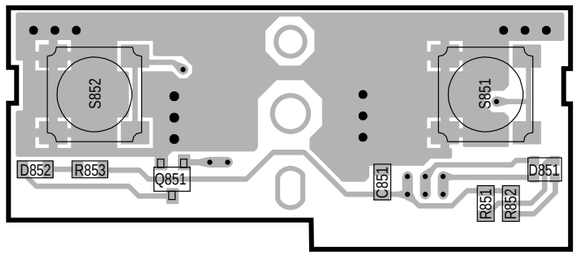

SW-355

B side

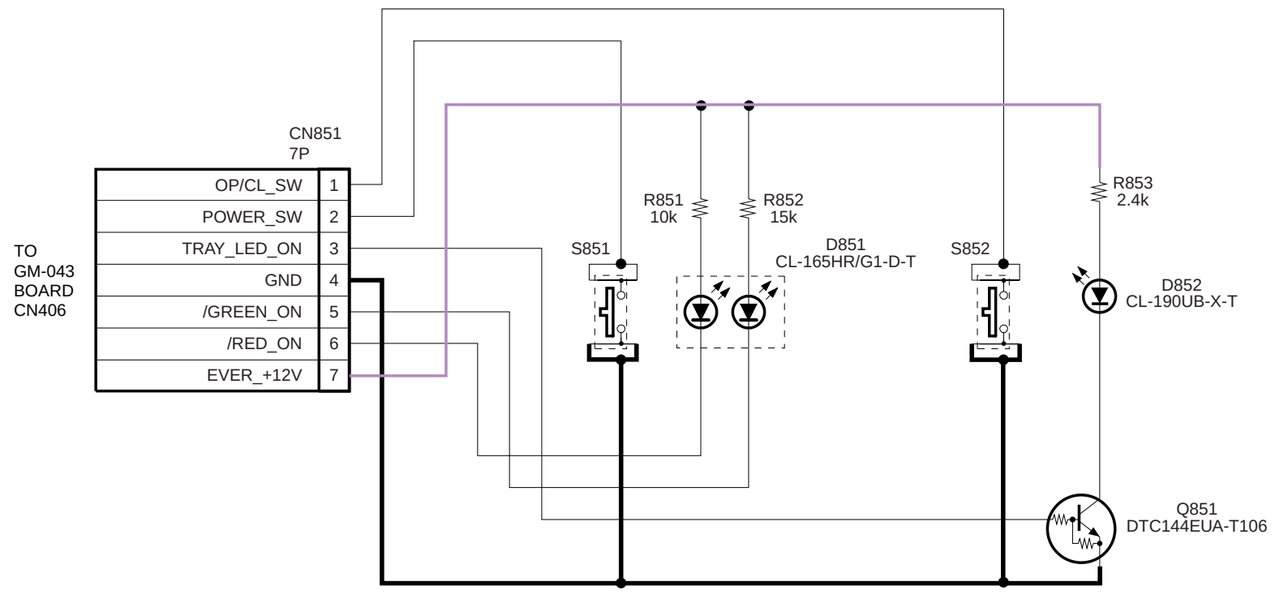

SW-355

Reproduction Prohibited

Reproduction Prohibited

IC BLOCK DIAGRAMS

CY2212ZC (IC101) [for GH Board]

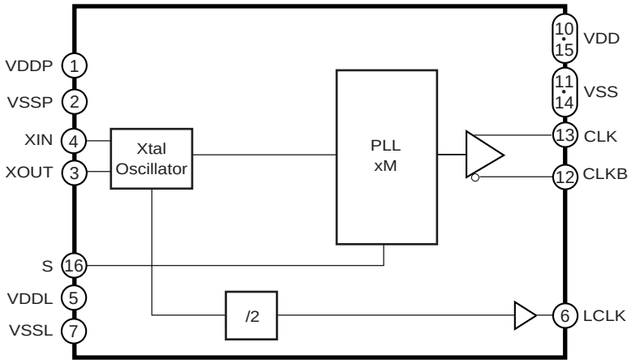

BA5912AFP-YE2 (IC102) [for GM Board]

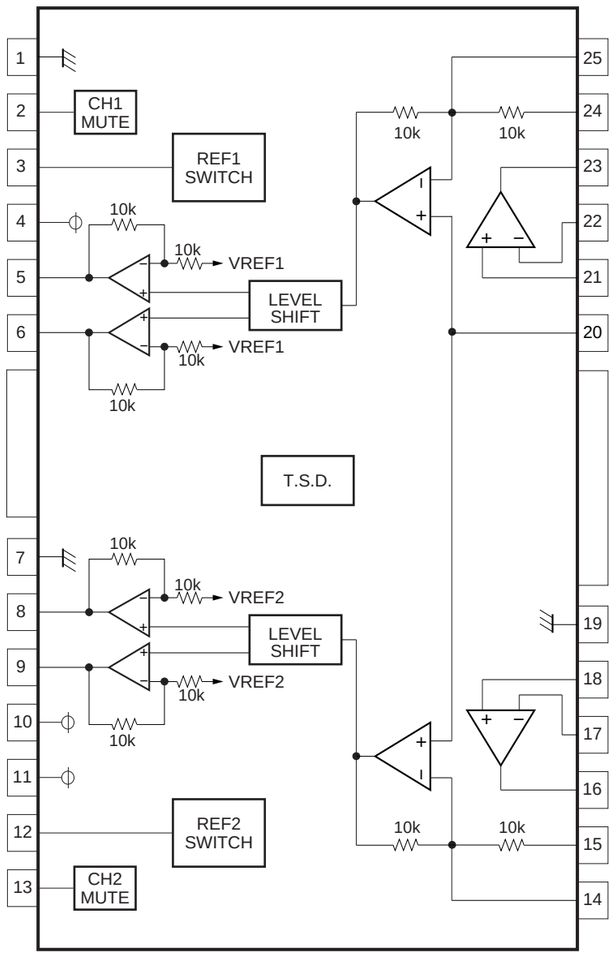

TC59RM716GB-8 (IC102, IC103) [for GH Board]

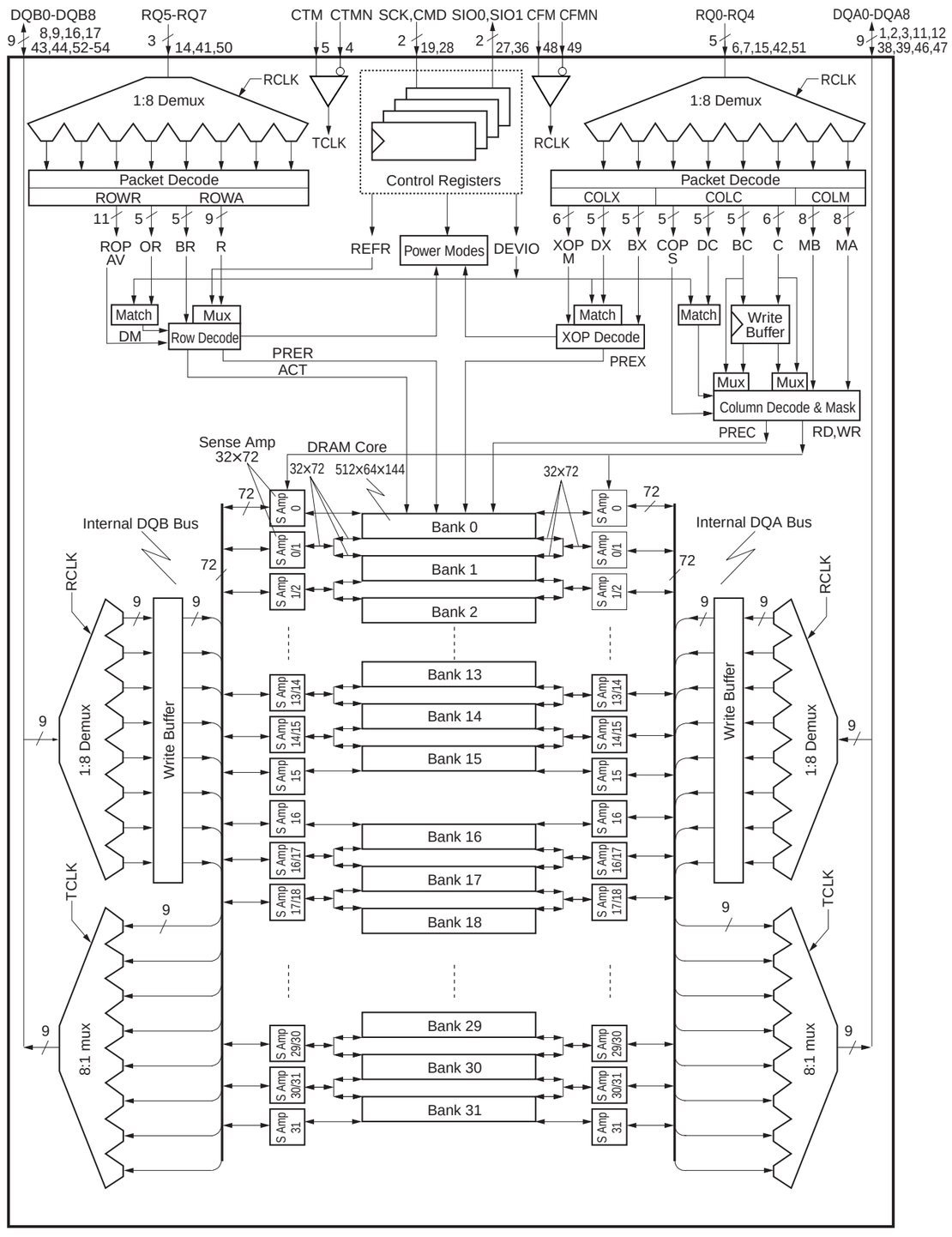

Reproduction Prohibited

SC44728PBEB (IC205) [for GH Board]

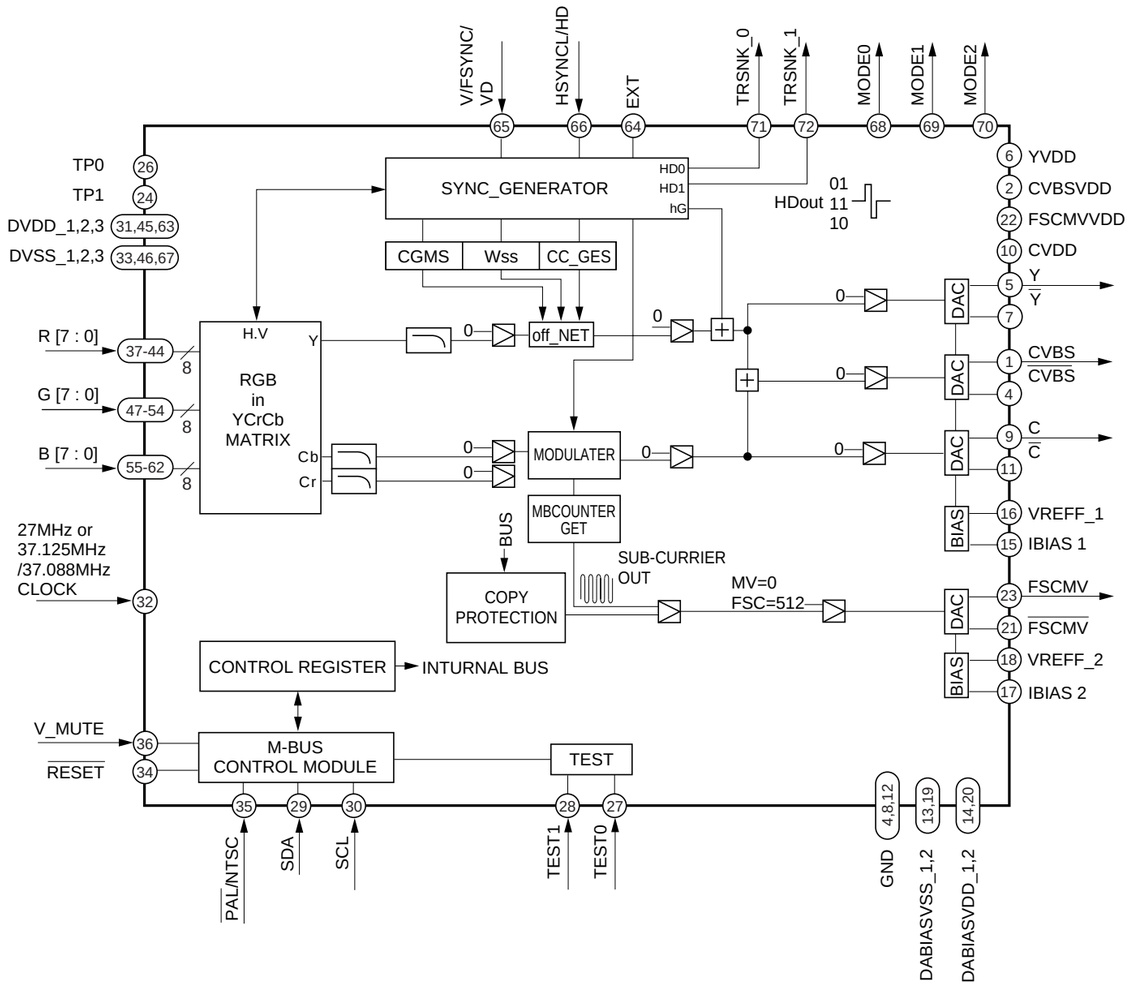

TMP87C807U (IC402) [for GD Board]

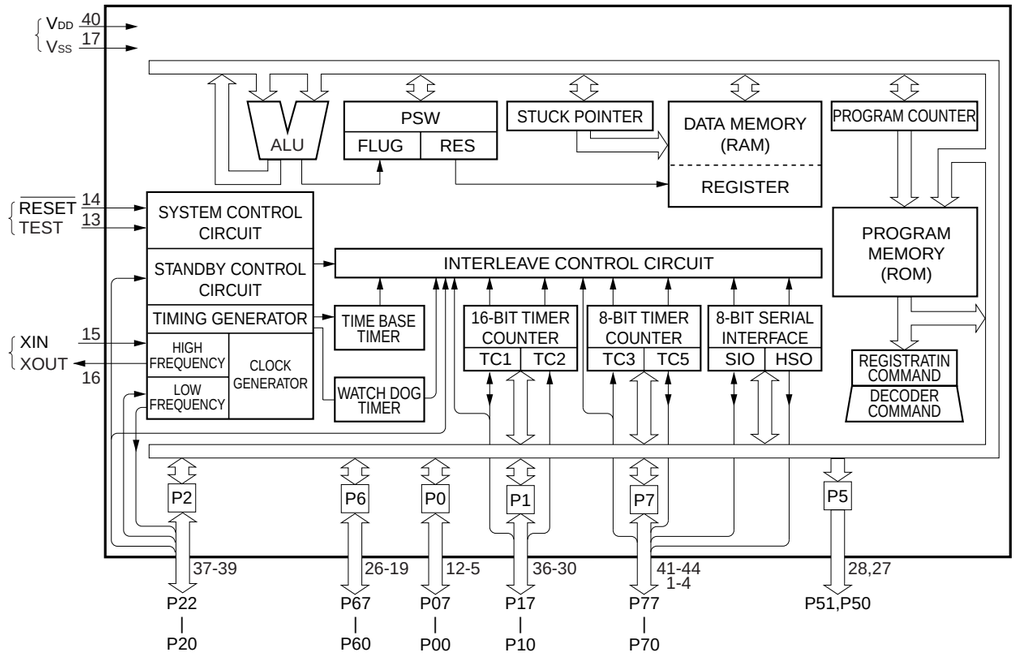

S-80769SN-JO (IC401) [for GD Board]

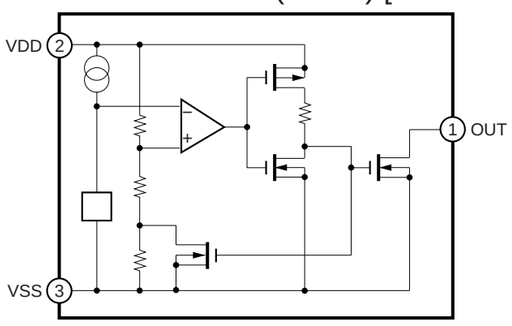

RS5C348A (IC405) [for GD Board]

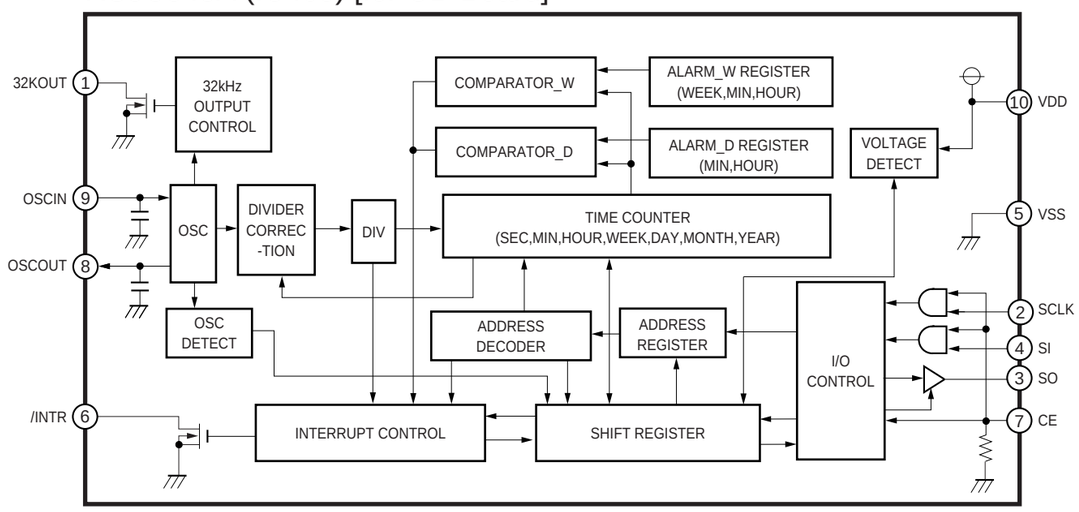

Reproduction Prohibited

T7X16 (YEL) (IC305) [for GH Board]

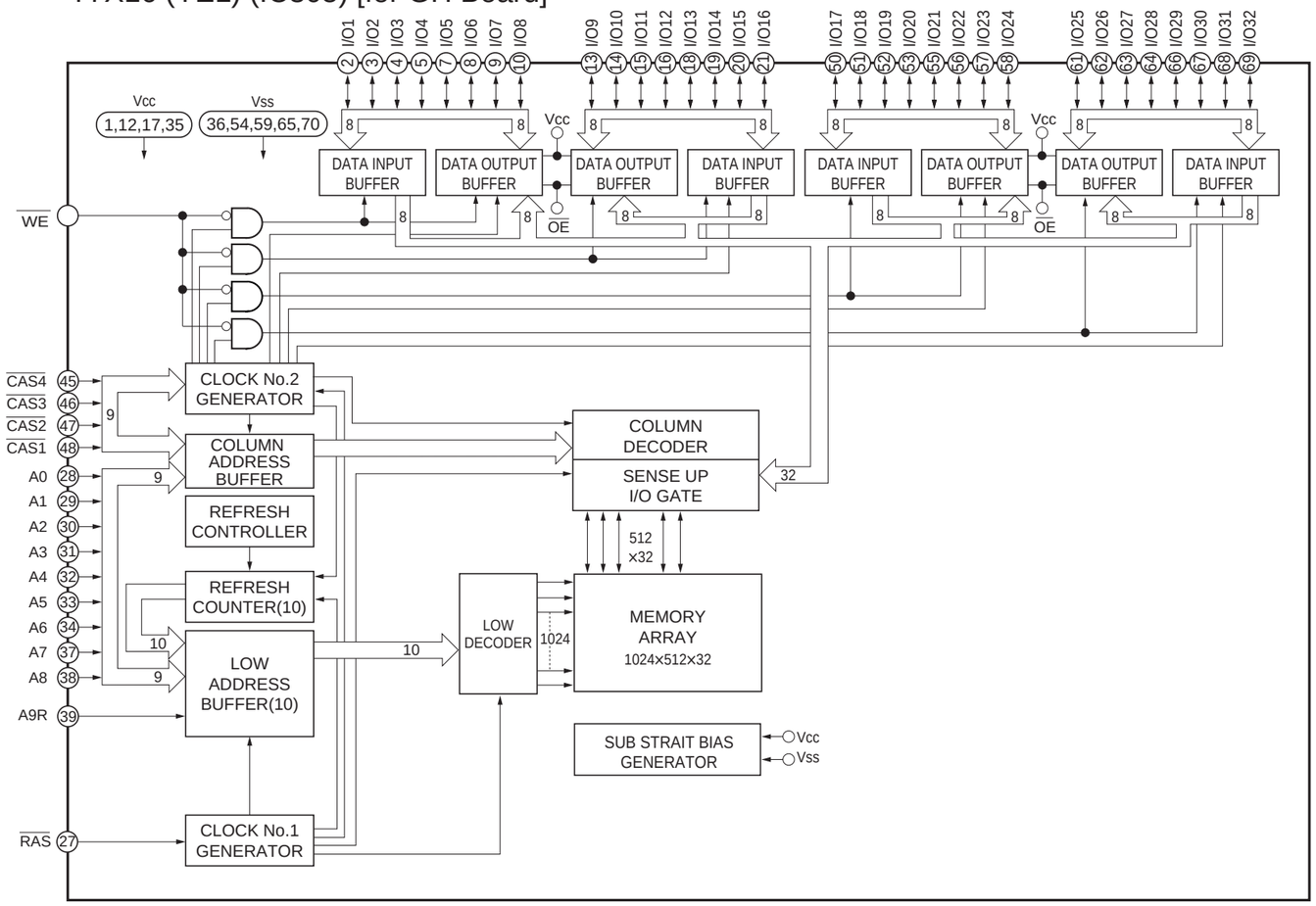

BR9080 (IC406) [for GD Board]

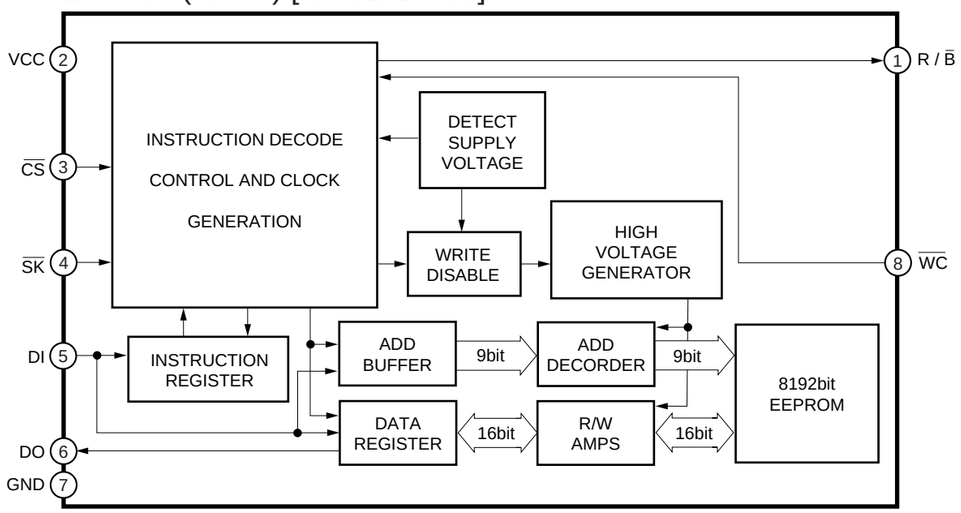

SI-3034LSA-TL (IC413) [for GD Board]

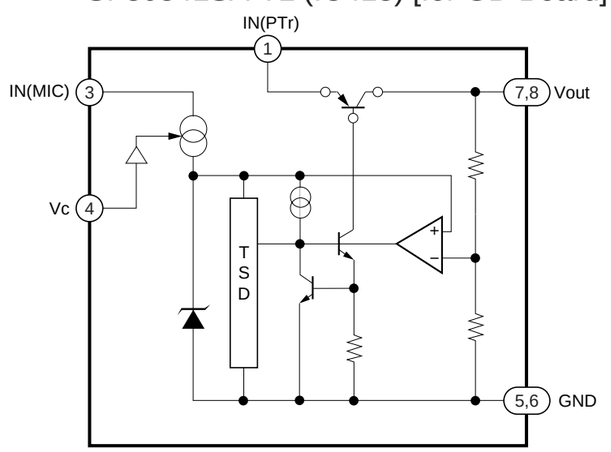

Reproduction Prohibited

CS4334 (IC517) [for GH Board]

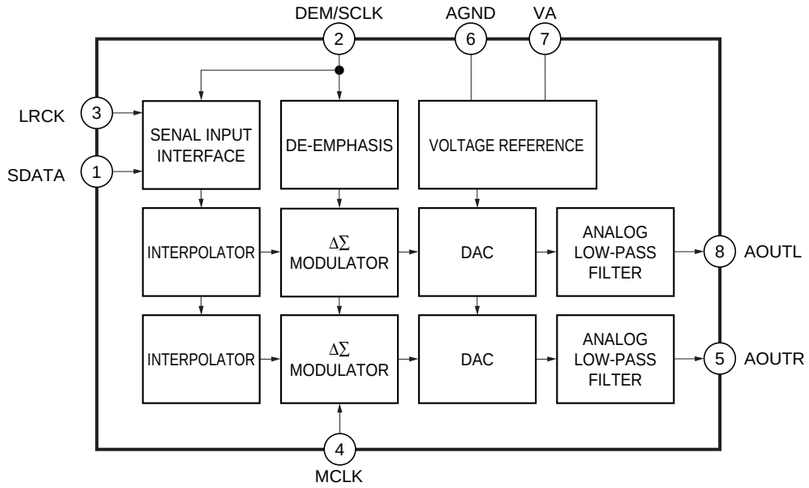

MC74VHC1G66DFT1 (IC606) [for GH Board]

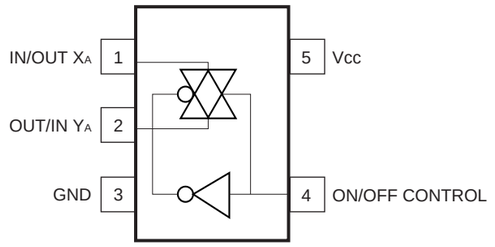

NJM2904V (IC602) [for GM Board]

BA6664FM (IC700) [for GM Board]

BA5810FP (IC703) [for GM Board]

Reproduction Prohibited

SECTION 5
ELECTRICAL PARTS LIST

NOTE :

- Due to standardization, replacements in the parts list may be different from the parts specified in the diagrams or the components used on the set.
- -XX and -X mean standardized parts, so they may have some difference from the original one.
- RESISTORS
  METAL : Metal-film resistor.
  F : nonflammable
  Unit is Ω.
- SEMICONDUCTORS
  In each case, u : μ, for example :
  uA . . : μA . . uPA . . : μPA . .
  uPB. . : μPB. . uPC . . : μPC . . uPD . . : μPD . .
- CAPACITORS
  uF : μF
- COILS
  uH : μH

When indicating parts by reference number, please include the board.

The components identified by mark ⚠ or dotted line with mark. ⚠ are critical for safety. Replace only with part number specified.

Ref.	Part No.	Description
	A-6712-831-A	**MOUNTED CIRCUIT BOARD,GH-006-11 for SCPH-30003, -30004**
	A-6712-836-A	**MOUNTED CIRCUIT BOARD,GH-006-11 for SCPH-30002**
	A-6712-835-A	**MOUNTED CIRCUIT BOARD,GH-006-21 for SCPH-30003, -30004**
	A-6712-837-A	**MOUNTED CIRCUIT BOARD,GH-006-21 for SCPH-30002**
		**********
		PLACE CODE #25GH
		<CAPACITOR>
C101	1-128-964-91	CAP, CHIP TANTALUM ELECT 100MF
C102	1-128-964-91	CAP, CHIP TANTALUM ELECT 100MF
C103	1-128-964-91	CAP, CHIP TANTALUM ELECT 100MF
C104	1-107-826-91	CAP, CHIP CERAMIC 100000PF B
C105	1-107-826-91	CAP, CHIP CERAMIC 100000PF B
C106	1-107-826-91	CAP, CHIP CERAMIC 100000PF B
C107	1-107-826-91	CAP, CHIP CERAMIC 100000PF B
C108	1-107-826-91	CAP, CHIP CERAMIC 100000PF B
C109	1-107-826-91	CAP, CHIP CERAMIC 100000PF B
C110	1-107-826-91	CAP, CHIP CERAMIC 100000PF B
C111	1-107-826-91	CAP, CHIP CERAMIC 100000PF B
C112	1-107-826-91	CAP, CHIP CERAMIC 100000PF B
C113	1-107-826-91	CAP, CHIP CERAMIC 100000PF B
C114	1-107-826-91	CAP, CHIP CERAMIC 100000PF B
C115	1-107-826-91	CAP, CHIP CERAMIC 100000PF B
C116	1-107-826-91	CAP, CHIP CERAMIC 100000PF B
C117	1-107-826-91	CAP, CHIP CERAMIC 100000PF B
C118	1-107-826-91	CAP, CHIP CERAMIC 100000PF B
C119	1-107-826-91	CAP, CHIP CERAMIC 100000PF B
C120	1-107-826-91	CAP, CHIP CERAMIC 100000PF B
C121	1-107-826-91	CAP, CHIP CERAMIC 100000PF B
C122	1-107-826-91	CAP, CHIP CERAMIC 100000PF B
C123	1-107-826-91	CAP, CHIP CERAMIC 100000PF B
C124	1-107-826-91	CAP, CHIP CERAMIC 100000PF B
C125	1-107-826-91	CAP, CHIP CERAMIC 100000PF B
C126	1-107-826-91	CAP, CHIP CERAMIC 100000PF B
C127	1-107-826-91	CAP, CHIP CERAMIC 100000PF B
C128	1-107-826-91	CAP, CHIP CERAMIC 100000PF B
C129	1-107-826-91	CAP, CHIP CERAMIC 100000PF B
C131	1-162-970-91	CAP, CERAMIC 10000PF B (1608)
C132	1-107-826-91	CAP, CHIP CERAMIC 100000PF B
C134	1-107-826-91	CAP, CHIP CERAMIC 100000PF B
C135	1-107-826-91	CAP, CHIP CERAMIC 100000PF B
C136	1-162-964-91	CAP,CHIP CERAMIC 1000PF B (1608)
C137	1-107-826-91	CAP, CHIP CERAMIC 100000PF B
C138	1-107-826-91	CAP, CHIP CERAMIC 100000PF B
C139	1-107-826-91	CAP, CHIP CERAMIC 100000PF B
C140	1-107-826-91	CAP, CHIP CERAMIC 100000PF B
C141	1-135-609-91	CAP, CHIP TANTALUM ELECT 220MF
C142	1-107-826-91	CAP, CHIP CERAMIC 100000PF B

SCRef.	Part No.	Description
C143	1-107-826-91	CAP, CHIP CERAMIC 100000PF B
C144	1-107-826-91	CAP, CHIP CERAMIC 100000PF B
C145	1-107-826-91	CAP, CHIP CERAMIC 100000PF B
C146	1-162-964-91	CAP,CHIP CERAMIC 1000PF B (1608)
C147	1-162-964-91	CAP,CHIP CERAMIC 1000PF B (1608)
C148	1-107-826-91	CAP, CHIP CERAMIC 100000PF B
C149	1-107-826-91	CAP, CHIP CERAMIC 100000PF B
C150	1-162-970-91	CAP, CERAMIC 10000PF B (1608)
C151	1-164-160-91	CAP,CERAMIC 20PF CH (1608)
C152	1-164-160-91	CAP,CERAMIC 20PF CH (1608)
C153	1-162-970-91	CAP, CERAMIC 10000PF B (1608)
C154	1-162-970-91	CAP, CERAMIC 10000PF B (1608)
C155	1-107-826-91	CAP, CHIP CERAMIC 100000PF B
C156	1-107-826-91	CAP, CHIP CERAMIC 100000PF B
C157	1-107-826-91	CAP, CHIP CERAMIC 100000PF B
C158	1-162-970-91	CAP, CERAMIC 10000PF B (1608)
C159	1-107-826-91	CAP, CHIP CERAMIC 100000PF B
C160	1-162-925-91	CAP, CERAMIC 68PF CH (1608)
C161	1-128-964-91	CAP, CHIP TANTALUM ELECT 100MF
C162	1-162-925-91	CAP, CERAMIC 68PF CH (1608)
C163	1-128-964-91	CAP, CHIP TANTALUM ELECT 100MF
C164	1-128-964-91	CAP, CHIP TANTALUM ELECT 100MF
C168	1-162-964-91	CAP,CHIP CERAMIC 1000PF B (1608)
C169	1-162-927-91	CAP, CERAMIC 100PF CH (1608)
C170	1-125-837-91	CAP, CHIP CERAMIC 1MF B (1608)
C175	1-107-826-91	CAP, CHIP CERAMIC 100000PF B
C176	1-107-826-91	CAP, CHIP CERAMIC 100000PF B
C212	1-125-837-91	CAP, CHIP CERAMIC 1MF B (1608)
C213	1-125-837-91	CAP, CHIP CERAMIC 1MF B (1608)
C214	1-125-837-91	CAP, CHIP CERAMIC 1MF B (1608)
C215	1-125-837-91	CAP, CHIP CERAMIC 1MF B (1608)
C216	1-125-837-91	CAP, CHIP CERAMIC 1MF B (1608)
C217	1-125-837-91	CAP, CHIP CERAMIC 1MF B (1608)
C218	1-125-837-91	CAP, CHIP CERAMIC 1MF B (1608)
C219	1-125-837-91	CAP, CHIP CERAMIC 1MF B (1608)
C220	1-125-837-91	CAP, CHIP CERAMIC 1MF B (1608)
C221	1-125-837-91	CAP, CHIP CERAMIC 1MF B (1608)
C222	1-125-837-91	CAP, CHIP CERAMIC 1MF B (1608)
C223	1-125-837-91	CAP, CHIP CERAMIC 1MF B (1608)
C224	1-125-837-91	CAP, CHIP CERAMIC 1MF B (1608)
C225	1-125-837-91	CAP, CHIP CERAMIC 1MF B (1608)
C226	1-125-837-91	CAP, CHIP CERAMIC 1MF B (1608)
C227	1-125-837-91	CAP, CHIP CERAMIC 1MF B (1608)
C228	1-125-837-91	CAP, CHIP CERAMIC 1MF B (1608)
C229	1-125-837-91	CAP, CHIP CERAMIC 1MF B (1608)
C230	1-125-837-91	CAP, CHIP CERAMIC 1MF B (1608)
C231	1-125-837-91	CAP, CHIP CERAMIC 1MF B (1608)
C232	1-125-837-91	CAP, CHIP CERAMIC 1MF B (1608)
C233	1-125-837-91	CAP, CHIP CERAMIC 1MF B (1608)
C234	1-125-837-91	CAP, CHIP CERAMIC 1MF B (1608)
C235	1-125-837-91	CAP, CHIP CERAMIC 1MF B (1608)

Ref.	Part No.	Description
C236	1-125-837-91	CAP, CHIP CERAMIC 1MF B (1608)
C237	1-125-837-91	CAP, CHIP CERAMIC 1MF B (1608)
C238	1-125-837-91	CAP, CHIP CERAMIC 1MF B (1608)
C239	1-125-837-91	CAP, CHIP CERAMIC 1MF B (1608)
C240	1-125-837-91	CAP, CHIP CERAMIC 1MF B (1608)
C241	1-125-837-91	CAP, CHIP CERAMIC 1MF B (1608)
C242	1-128-707-22	CAP, TANTALUM ELECT (SMD)220
C243	1-135-609-91	CAP, CHIP TANTALUM ELECT 220MF
C244	1-128-707-22	CAP, TANTALUM ELECT (SMD)220
C245	1-128-707-22	CAP, TANTALUM ELECT (SMD)220
C247	1-107-826-91	CAP, CHIP CERAMIC 100000PF B
C248	1-107-826-91	CAP, CHIP CERAMIC 100000PF B
C249	1-115-156-91	CAP, CERAMIC 1000000PF F (1608)
C250	1-127-760-91	CAP, CERAMIC 4.7MF (2012)
C252	1-107-826-91	CAP, CHIP CERAMIC 100000PF B
C254	1-107-826-91	CAP, CHIP CERAMIC 100000PF B
C255	1-107-826-91	CAP, CHIP CERAMIC 100000PF B
C256	1-107-826-91	CAP, CHIP CERAMIC 100000PF B
C257	1-125-837-91	CAP, CHIP CERAMIC 1MF B (1608)
C261	1-128-004-21	CAP, ELECT (CHIP) 10MF
C262	1-128-004-21	CAP, ELECT (CHIP) 10MF
C263	1-128-004-21	CAP, ELECT (CHIP) 10MF
C265	1-117-720-91	CAP, CERAMIC 4.7MF F (2012)
C266	1-128-004-21	CAP, ELECT (CHIP) 10MF
C267	1-126-210-21	CAP, ELECT 220MF
C268	1-126-210-21	CAP, ELECT 220MF
C269	1-164-160-91	CAP,CERAMIC 20PF CH (1608)
C270	1-125-777-81	CAP, CHIP CERAMIC 0.1MF B (1005)
C271	1-125-777-81	CAP, CHIP CERAMIC 0.1MF B (1005)
C272	1-125-777-81	CAP, CHIP CERAMIC 0.1MF B (1005)
C275	1-125-777-81	CAP, CHIP CERAMIC 0.1MF B (1005)
C276	1-164-874-81	CAP,CHIP CERAMIC 100PF CH (1005)
C277	1-164-874-81	CAP,CHIP CERAMIC 100PF CH (1005)
C278	1-113-619-91	CAP, CERAMIC 470000PF F (1608)
C279	1-113-619-91	CAP, CERAMIC 470000PF F (1608)
C281	1-115-156-91	CAP, CERAMIC 1000000PF F (1608)
C282	1-113-619-91	CAP, CERAMIC 470000PF F (1608)
C283	1-107-826-91	CAP, CHIP CERAMIC 100000PF B
C285	1-113-619-91	CAP, CERAMIC 470000PF F (1608)
C286	1-113-619-91	CAP, CERAMIC 470000PF F (1608)
C287	1-107-826-91	CAP, CHIP CERAMIC 100000PF B
C288	1-125-837-91	CAP, CHIP CERAMIC 1MF B (1608)
C289	1-164-937-81	CAP, CHIPCERAMIC 1000PF B (1005)
C290	1-113-619-91	CAP, CERAMIC 470000PF F (1608)
C291	1-162-923-91	CAP, CERAMIC 47PF CH (1608)
C292	1-107-725-91	CAP, CERAMIC 100000PF B (2012)
C293	1-137-765-21	CAP, ELECT 47MF
C294	1-107-826-91	CAP, CHIP CERAMIC 100000PF B
C295	1-107-826-91	CAP, CHIP CERAMIC 100000PF B
C296	1-126-210-21	CAP, ELECT 220MF
C297	1-126-210-21	CAP, ELECT 220MF
C298	1-126-210-21	CAP, ELECT 220MF
C302	1-125-777-81	CAP, CHIP CERAMIC 0.1MF B (1005)
C303	1-125-777-81	CAP, CHIP CERAMIC 0.1MF B (1005)
C304	1-164-937-81	CAP, CHIPCERAMIC 1000PF B (1005)
C306	1-164-387-91	CAP, CERAMIC 240PF CH (1608)
C307	1-107-826-91	CAP, CHIP CERAMIC 100000PF B
C308	1-165-112-91	CAP, CERAMIC 330000PF F (1608)
C309	1-162-970-91	CAP, CERAMIC 10000PF B (1608)
C310	1-162-970-91	CAP, CERAMIC 10000PF B (1608)
C311	1-162-916-91	CAP, CERAMIC 12PF CH (1608)
C312	1-162-917-91	CAP, CERAMIC 15PF CH (1608)
C313	1-162-910-91	CAP, CERAMIC 5.0PF CH (1608)
C314	1-162-910-91	CAP, CERAMIC 5.0PF CH (1608)
C315	1-125-777-81	CAP, CHIP CERAMIC 0.1MF B (1005)
C316	1-165-112-91	CAP, CERAMIC 330000PF F (1608)

Ref.	Part No.	Description
C317	1-162-970-91	CAP, CERAMIC 10000PF B (1608)
C318	1-162-970-91	CAP, CERAMIC 10000PF B (1608)
C319	1-162-970-91	CAP, CERAMIC 10000PF B (1608)
C320	1-162-970-91	CAP, CERAMIC 10000PF B (1608)
C321	1-162-970-91	CAP, CERAMIC 10000PF B (1608)
C322	1-162-970-91	CAP, CERAMIC 10000PF B (1608)
C323	1-162-970-91	CAP, CERAMIC 10000PF B (1608)
C325	1-162-970-91	CAP, CERAMIC 10000PF B (1608)
C326	1-162-970-91	CAP, CERAMIC 10000PF B (1608)
C327	1-162-970-91	CAP, CERAMIC 10000PF B (1608)
C328	1-162-970-91	CAP, CERAMIC 10000PF B (1608)
C329	1-162-970-91	CAP, CERAMIC 10000PF B (1608)
C330	1-162-970-91	CAP, CERAMIC 10000PF B (1608)
C331	1-162-970-91	CAP, CERAMIC 10000PF B (1608)
C332	1-162-970-91	CAP, CERAMIC 10000PF B (1608)
C333	1-162-970-91	CAP, CERAMIC 10000PF B (1608)
C334	1-162-970-91	CAP, CERAMIC 10000PF B (1608)
C335	1-162-970-91	CAP, CERAMIC 10000PF B (1608)
C336	1-162-970-91	CAP, CERAMIC 10000PF B (1608)
C337	1-162-970-91	CAP, CERAMIC 10000PF B (1608)
C338	1-107-826-91	CAP, CHIP CERAMIC 100000PF B
C339	1-125-764-41	CAP, CHIP CERAMIC 100PF CH
C340	1-125-764-41	CAP, CHIP CERAMIC 100PF CH
C341	1-125-764-41	CAP, CHIP CERAMIC 100PF CH
C355	1-107-826-91	CAP, CHIP CERAMIC 100000PF B
C356	1-107-826-91	CAP, CHIP CERAMIC 100000PF B
C363	1-107-826-91	CAP, CHIP CERAMIC 100000PF B
C364	1-107-826-91	CAP, CHIP CERAMIC 100000PF B
C365	1-107-826-91	CAP, CHIP CERAMIC 100000PF B
C366	1-107-826-91	CAP, CHIP CERAMIC 100000PF B
C367	1-107-826-91	CAP, CHIP CERAMIC 100000PF B
C368	1-125-777-81	CAP, CHIP CERAMIC 0.1MF B (1005)
C369	1-125-777-81	CAP, CHIP CERAMIC 0.1MF B (1005)
C370	1-162-964-91	CAP,CHIP CERAMIC 1000PF B (1608)
C371	1-162-964-91	CAP,CHIP CERAMIC 1000PF B (1608)
C372	1-128-995-21	CAP, ELECT 100MF
C373	1-128-995-21	CAP, ELECT 100MF
C401	1-162-964-91	CAP,CHIP CERAMIC 1000PF B (1608)
C409	1-162-969-91	CAP, CERAMIC 6800PF B (1608)
C410	1-162-969-91	CAP, CERAMIC 6800PF B (1608)
C414	1-162-965-91	CAP, CERAMIC 1500PF B (1608)
C415	1-162-965-91	CAP, CERAMIC 1500PF B (1608)
C416	1-107-826-91	CAP, CHIP CERAMIC 100000PF B
C417	1-164-379-91	CAP, CERAMIC 43PF CH (1608)
C418	1-107-826-91	CAP, CHIP CERAMIC 100000PF B
C419	1-162-970-91	CAP, CERAMIC 10000PF B (1608)
C420	1-107-826-91	CAP, CHIP CERAMIC 100000PF B
C421	1-127-692-91	CAP, CHIP CERAMIC 10MF B (3225)
C422	1-135-347-21	CAP, SOLID ELECT 82MF
C423	1-135-347-21	CAP, SOLID ELECT 82MF
C424	1-127-692-91	CAP, CHIP CERAMIC 10MF B (3225)
C427	1-135-347-21	CAP, SOLID ELECT 82MF
C430	1-107-826-91	CAP, CHIP CERAMIC 100000PF B
C431	1-107-826-91	CAP, CHIP CERAMIC 100000PF B
C432	1-115-339-91	CAP, CERAMIC 0.1MF B (2012)
C433	1-115-339-91	CAP, CERAMIC 0.1MF B (2012)
C435	1-115-566-91	CAP, CERAMIC 4.7MF B
C436	1-135-593-21	CAP, ELECT 150MF
C437	1-107-826-91	CAP, CHIP CERAMIC 100000PF B
C438	1-107-826-91	CAP, CHIP CERAMIC 100000PF B
C439	1-135-593-21	CAP, ELECT 150MF
C440	1-135-592-21	CAP, ELECT 100MF
C441	1-135-593-21	CAP, ELECT 150MF
C443	1-135-592-21	CAP, ELECT 100MF
C444	1-107-826-91	CAP, CHIP CERAMIC 100000PF B
C446	1-135-592-21	CAP, ELECT 100MF

Reproduction Prohibited

Ref.	Part No.	Description
C447	1-107-682-91	CAP, CERAMIC 1000000PF B 3216
C450	1-107-826-91	CAP, CHIP CERAMIC 100000PF B
C457	1-124-779-21	CAP, ELECT 10MF
C466	1-107-826-91	CAP, CHIP CERAMIC 100000PF B
C468	1-126-209-21	CAP, ELECT 100MF
C477	1-124-779-21	CAP, ELECT 10MF
C490	1-126-209-21	CAP, ELECT 100MF
C491	1-117-681-21	CAP, ELECT 100MF
C492	1-107-826-91	CAP, CHIP CERAMIC 100000PF B
C494	1-125-777-81	CAP, CHIP CERAMIC 0.1MF B (1005)
C495	1-107-826-91	CAP, CHIP CERAMIC 100000PF B
C496	1-125-837-91	CAP, CHIP CERAMIC 1MF B (1608)
C500	1-117-720-91	CAP, CERAMIC 4.7MF F (2012)
C501	1-117-720-91	CAP, CERAMIC 4.7MF F (2012)
C503	1-107-725-91	CAP, CERAMIC 100000PF B (2012)
C504	1-117-720-91	CAP, CERAMIC 4.7MF F (2012)
C505	1-113-619-91	CAP,CERAMIC 470000PF F(1608) **for GH006-11**
C506	1-107-826-91	CAP, CHIP CERAMIC 100000PF B
C508	1-113-619-91	CAP, CERAMIC 470000PF F (1608)
C509	1-113-619-91	CAP, CERAMIC 470000PF F (1608)
C510	1-113-619-91	CAP, CERAMIC 470000PF F (1608)
C511	1-162-964-91	CAP,CHIP CERAMIC 1000PF B (1608)
C512	1-113-619-91	CAP,CERAMIC 470000PF F(1608) **for GH006-11**
C513	1-113-619-91	CAP, CERAMIC 470000PF F (1608)
C514	1-113-619-91	CAP, CERAMIC 470000PF F (1608)
C516	1-113-619-91	CAP, CERAMIC 470000PF F (1608)
C517	1-113-619-91	CAP, CERAMIC 470000PF F (1608)
C518	1-113-619-91	CAP, CERAMIC 470000PF F (1608)
C520	1-164-874-81	CAP,CHIP CERAMIC 100PF CH (1005)
C521	1-125-837-91	CAP, CHIP CERAMIC 1MF B (1608)
C522	1-164-156-91	CAP, CHIP CERAMIC 0.1MF F (1608)
C523	1-107-726-91	CAP,CHIP CERAMIC 10000PF B(1608)
C524	1-113-619-91	CAP, CERAMIC 470000PF F (1608)
C525	1-113-619-91	CAP, CERAMIC 470000PF F (1608)
C526	1-164-156-91	CAP,CHIP CERAMIC 0.1MF F(1608) **for GH006-21**
C527	1-162-964-91	CAP,CHIP CERAMIC 1000PF B (1608)
C528	1-125-837-91	CAP, CHIP CERAMIC 1MF B (1608)
C529	1-128-008-21	CAP, ELECT (CHIP) 3.3MF
C530	1-128-008-21	CAP, ELECT (CHIP) 3.3MF
C532	1-164-874-81	CAP,CHIP CERAMIC 100PF CH (1005)
C533	1-113-619-91	CAP, CERAMIC 470000PF F (1608)
C534	1-113-619-91	CAP, CERAMIC 470000PF F (1608)
C535	1-113-619-91	CAP, CERAMIC 470000PF F (1608)
C536	1-113-619-91	CAP, CERAMIC 470000PF F (1608)
C537	1-113-619-91	CAP, CERAMIC 470000PF F (1608)
C538	1-113-619-91	CAP, CERAMIC 470000PF F (1608)
C539	1-113-619-91	CAP, CERAMIC 470000PF F (1608)
C540	1-113-619-91	CAP, CERAMIC 470000PF F (1608)
C541	1-113-619-91	CAP, CERAMIC 470000PF F (1608)
C542	1-164-874-81	CAP,CHIP CERAMIC 100PF CH (1005)
C543	1-113-619-91	CAP,CERAMIC 470000PF F (1608) **for GH006-21**
C601	1-164-156-91	CAP, CHIP CERAMIC 0.1MF F (1608)
C603	1-164-937-81	CAP, CHIPCERAMIC 1000PF B (1005)
C605	1-164-937-81	CAP, CHIPCERAMIC 1000PF B (1005)
C606	1-162-964-91	CAP,CHIP CERAMIC 1000PF B (1608)
C607	1-162-968-91	CAP,CHIP CERAMIC 4700PF B (1608)
C609	1-107-826-91	CAP, CHIP CERAMIC 100000PF B
C623	1-164-156-91	CAP, CHIP CERAMIC 0.1MF F (1608)
C624	1-107-826-91	CAP, CHIP CERAMIC 100000PF B
C625	1-164-156-91	CAP, CHIP CERAMIC 0.1MF F (1608)
C627	1-162-966-91	CAP, CERAMIC 2200PF B (1608)
C628	1-162-966-91	CAP, CERAMIC 2200PF B (1608)
C629	1-164-156-91	CAP, CHIP CERAMIC 0.1MF F (1608)
C630	1-164-173-91	CAP,CERAMIC 3900PF B (1608)
C631	1-162-968-91	CAP,CHIP CERAMIC 4700PF B (1608)
C632	1-107-826-91	CAP, CHIP CERAMIC 100000PF B

Ref.	Part No.	Description
C633	1-164-156-91	CAP, CHIP CERAMIC 0.1MF F (1608)
C634	1-164-156-91	CAP, CHIP CERAMIC 0.1MF F (1608)
C635	1-162-968-91	CAP,CHIP CERAMIC 4700PF B (1608)
C636	1-125-777-81	CAP, CHIP CERAMIC 0.1MF B (1005)
C637	1-164-937-81	CAP, CHIPCERAMIC 1000PF B (1005)
C638	1-164-943-81	CAP,CHIP CERAMIC 10000PF B(1005)
C639	1-164-217-91	CAP,CERAMIC 150PF CH (1608)
C640	1-135-259-91	CAP, CHIP TANTALUM ELECT 10MF
C642	1-164-156-91	CAP, CHIP CERAMIC 0.1MF F (1608)
C643	1-125-777-81	CAP, CHIP CERAMIC 0.1MF B (1005)
C644	1-164-882-81	CAP,CHIP CERAMIC 220PF CH (1005)
C645	1-165-176-91	CAP,CERAMIC 47000PF B (1608)
C646	1-164-937-81	CAP, CHIPCERAMIC 1000PF B (1005)
C647	1-117-863-91	CAP, CHIP CERAMIC0.47MF B (1608)
C648	1-107-820-81	CAP, CHIP CERAMIC 100000PF F
C649	1-164-943-81	CAP,CHIP CERAMIC 10000PF B(1005)
C650	1-164-882-81	CAP,CHIP CERAMIC 220PF CH (1005)
C651	1-164-939-81	CAP, CHIPCERAMIC 2200PF B (1005)
C652	1-125-777-81	CAP, CHIP CERAMIC 0.1MF B (1005)
C653	1-164-939-81	CAP, CHIPCERAMIC 2200PF B (1005)
C654	1-164-156-91	CAP, CHIP CERAMIC 0.1MF F (1608)
C655	1-135-259-91	CAP, CHIP TANTALUM ELECT 10MF
C656	1-107-820-81	CAP, CHIP CERAMIC 100000PF F
C657	1-164-230-91	CAP,CERAMIC 220PF CH (1608)
C658	1-164-882-81	CAP,CHIP CERAMIC 220PF CH (1005)
C660	1-125-777-81	CAP, CHIP CERAMIC 0.1MF B (1005)
C661	1-107-820-81	CAP, CHIP CERAMIC 100000PF F
C662	1-164-156-91	CAP, CHIP CERAMIC 0.1MF F (1608)
C663	1-164-156-91	CAP, CHIP CERAMIC 0.1MF F (1608)
C664	1-135-259-91	CAP, CHIP TANTALUM ELECT 10MF
C665	1-107-820-81	CAP, CHIP CERAMIC 100000PF F
C666	1-107-820-81	CAP, CHIP CERAMIC 100000PF F
C667	1-107-820-81	CAP, CHIP CERAMIC 100000PF F
C668	1-107-826-91	CAP, CHIP CERAMIC 100000PF B
C671	1-164-156-91	CAP, CHIP CERAMIC 0.1MF F (1608)
C672	1-164-156-91	CAP, CHIP CERAMIC 0.1MF F (1608)
C673	1-164-156-91	CAP, CHIP CERAMIC 0.1MF F (1608)
C674	1-164-156-91	CAP, CHIP CERAMIC 0.1MF F (1608)
C675	1-107-820-81	CAP, CHIP CERAMIC 100000PF F
C676	1-107-820-81	CAP, CHIP CERAMIC 100000PF F
C680	1-162-964-91	CAP,CHIP CERAMIC 1000PF B (1608)
C685	1-117-863-91	CAP, CHIP CERAMIC0.47MF B (1608)
C688	1-162-964-91	CAP,CHIP CERAMIC 1000PF B (1608)
C689	1-162-968-91	CAP,CHIP CERAMIC 4700PF B (1608)
C901	1-107-826-91	CAP, CHIP CERAMIC 100000PF B
C902	1-107-826-91	CAP, CHIP CERAMIC 100000PF B
C903	1-107-826-91	CAP, CHIP CERAMIC 100000PF B
C904	1-107-826-91	CAP, CHIP CERAMIC 100000PF B
C905	1-107-826-91	CAP, CHIP CERAMIC 100000PF B
C906	1-107-826-91	CAP, CHIP CERAMIC 100000PF B
C907	1-107-826-91	CAP, CHIP CERAMIC 100000PF B
C908	1-107-826-91	CAP, CHIP CERAMIC 100000PF B
C909	1-107-826-91	CAP, CHIP CERAMIC 100000PF B
C910	1-107-826-91	CAP, CHIP CERAMIC 100000PF B
C911	1-107-826-91	CAP, CHIP CERAMIC 100000PF B
C912	1-107-826-91	CAP, CHIP CERAMIC 100000PF B
C913	1-107-826-91	CAP, CHIP CERAMIC 100000PF B
C914	1-107-826-91	CAP, CHIP CERAMIC 100000PF B
C915	1-107-826-91	CAP, CHIP CERAMIC 100000PF B
C916	1-107-826-91	CAP, CHIP CERAMIC 100000PF B
C917	1-107-826-91	CAP, CHIP CERAMIC 100000PF B
C918	1-107-826-91	CAP, CHIP CERAMIC 100000PF B
C919	1-107-826-91	CAP, CHIP CERAMIC 100000PF B
C920	1-107-826-91	CAP, CHIP CERAMIC 100000PF B
C921	1-107-826-91	CAP, CHIP CERAMIC 100000PF B
C922	1-107-826-91	CAP, CHIP CERAMIC 100000PF B

Ref.	Part No.	Description
C923	1-107-826-91	CAP, CHIP CERAMIC 100000PF B
C924	1-107-826-91	CAP, CHIP CERAMIC 100000PF B
C925	1-107-826-91	CAP, CHIP CERAMIC 100000PF B
C926	1-107-826-91	CAP, CHIP CERAMIC 100000PF B
C927	1-107-826-91	CAP, CHIP CERAMIC 100000PF B
C928	1-107-826-91	CAP, CHIP CERAMIC 100000PF B
C929	1-107-826-91	CAP, CHIP CERAMIC 100000PF B
C930	1-107-826-91	CAP, CHIP CERAMIC 100000PF B
C931	1-107-826-91	CAP, CHIP CERAMIC 100000PF B
C932	1-107-826-91	CAP, CHIP CERAMIC 100000PF B
C933	1-107-826-91	CAP, CHIP CERAMIC 100000PF B
C934	1-107-826-91	CAP, CHIP CERAMIC 100000PF B
C935	1-107-826-91	CAP, CHIP CERAMIC 100000PF B
C936	1-107-826-91	CAP, CHIP CERAMIC 100000PF B
C937	1-107-826-91	CAP, CHIP CERAMIC 100000PF B
C938	1-107-826-91	CAP, CHIP CERAMIC 100000PF B
C939	1-107-826-91	CAP, CHIP CERAMIC 100000PF B
C940	1-107-826-91	CAP, CHIP CERAMIC 100000PF B
C941	1-107-826-91	CAP, CHIP CERAMIC 100000PF B
C942	1-107-826-91	CAP, CHIP CERAMIC 100000PF B
C943	1-107-826-91	CAP, CHIP CERAMIC 100000PF B
C944	1-107-826-91	CAP, CHIP CERAMIC 100000PF B
C945	1-107-826-91	CAP, CHIP CERAMIC 100000PF B
C946	1-107-826-91	CAP, CHIP CERAMIC 100000PF B
C947	1-107-826-91	CAP, CHIP CERAMIC 100000PF B
C948	1-107-826-91	CAP, CHIP CERAMIC 100000PF B
C949	1-107-826-91	CAP, CHIP CERAMIC 100000PF B
C950	1-107-826-91	CAP, CHIP CERAMIC 100000PF B
C951	1-107-826-91	CAP, CHIP CERAMIC 100000PF B
C952	1-107-826-91	CAP, CHIP CERAMIC 100000PF B
C953	1-107-826-91	CAP, CHIP CERAMIC 100000PF B
C954	1-107-826-91	CAP, CHIP CERAMIC 100000PF B
C955	1-107-826-91	CAP, CHIP CERAMIC 100000PF B
C956	1-107-826-91	CAP, CHIP CERAMIC 100000PF B
C957	1-107-826-91	CAP, CHIP CERAMIC 100000PF B
C958	1-107-826-91	CAP, CHIP CERAMIC 100000PF B
C959	1-107-826-91	CAP, CHIP CERAMIC 100000PF B
C960	1-107-826-91	CAP, CHIP CERAMIC 100000PF B
C961	1-107-826-91	CAP, CHIP CERAMIC 100000PF B
C962	1-107-826-91	CAP, CHIP CERAMIC 100000PF B
C963	1-107-826-91	CAP, CHIP CERAMIC 100000PF B
C965	1-107-826-91	CAP, CHIP CERAMIC 100000PF B
C966	1-107-826-91	CAP, CHIP CERAMIC 100000PF B
C967	1-125-837-91	CAP, CHIP CERAMIC 1MF B (1608)
C968	1-125-837-91	CAP, CHIP CERAMIC 1MF B (1608)
C980	1-107-826-91	CAP, CHIP CERAMIC 100000PF B
C981	1-107-826-91	CAP, CHIP CERAMIC 100000PF B
C982	1-107-826-91	CAP, CHIP CERAMIC 100000PF B
C983	1-107-826-91	CAP, CHIP CERAMIC 100000PF B
C984	1-107-826-91	CAP, CHIP CERAMIC 100000PF B
C985	1-107-826-91	CAP, CHIP CERAMIC 100000PF B
C986	1-107-826-91	CAP, CHIP CERAMIC 100000PF B
C987	1-107-826-91	CAP, CHIP CERAMIC 100000PF B
C988	1-107-826-91	CAP, CHIP CERAMIC 100000PF B
C989	1-107-826-91	CAP, CHIP CERAMIC 100000PF B
C990	1-125-837-91	CAP, CHIP CERAMIC 1MF B (1608)
		<CONNECTOR>
CN201	1-794-209-11	CONNECTOR, SQUARE TYPE 12P
CN301	1-794-208-11	CONNECTOR, SQUARE TYPE 4P
CN302	1-794-206-21	CONNECTOR, FFC/FPC (ZIF) 36P
CN303	1-794-207-11	CONNECTOR, USB 8P
CN403	1-770-619-21	PIN, CONNECTOR 2P
CN406	1-815-226-21	CONNECTOR, FFC/FPC (ZIF) 40P
CN407	1-815-301-11	PIN, CONNECTOR 4P
CN408	1-815-302-11	PIN, CONNECTOR (PLUG) 34P

Ref.	Part No.	Description
CN501	1-418-965-11	TRANSMITTER UNIT, LIGHT
CN504	1-815-190-21	CONNECTOR BOARD TO BOARD 110P
CN604	1-793-823-21	CONNECTOR, FFC/FPC (ZIF) 54P
		<NETWORK>
CP201	1-234-605-21	NETWORK, RC
		<DIODE>
D201	8-719-065-78	DIODE MAZF12000LS0
D202	8-719-064-61	DIODE 01BZA8.2(TE85L)
D203	8-719-064-61	DIODE 01BZA8.2(TE85L)
D204	8-719-064-61	DIODE 01BZA8.2(TE85L)
D205	8-719-064-61	DIODE 01BZA8.2(TE85L)
D206	8-719-064-61	DIODE 01BZA8.2(TE85L)
D208	8-719-064-61	DIODE 01BZA8.2(TE85L)
D209	8-719-064-61	DIODE 01BZA8.2(TE85L)
D210	8-719-064-61	DIODE 01BZA8.2(TE85L)
D301	8-719-071-87	DIODE MA785-(TX),SO
D302	8-719-071-87	DIODE MA785-(TX),SO
D402	8-719-074-34	DIODE RB495D-T146
D403	8-719-074-34	DIODE RB495D-T146
D405	8-719-078-04	DIODE EC31QS03L-TE12L
D500	8-719-941-21	DIODE DAP202UT106
D501	8-719-082-76	DIODE CL-201TLY-C-TU
		<FUSE>
⚠ F001	1-576-434-21	FUSE, CHIP
⚠ F002	1-576-434-21	FUSE, CHIP
		<FERRITE BEAD>
FB102	1-469-667-21	FERRITE, EMI (SMD)
FB103	1-469-667-21	FERRITE, EMI (SMD)
FB201	1-414-813-21	FERRITE, EMI (SMD)
FB202	1-500-113-22	BEAD, FERRITE (CHIP)
FB203	1-500-113-22	BEAD, FERRITE (CHIP)
FB204	1-500-113-22	BEAD, FERRITE (CHIP)
FB205	1-500-113-22	BEAD, FERRITE (CHIP)
FB206	1-500-113-22	BEAD, FERRITE (CHIP)
FB303	1-414-555-21	FERRITE, EMI (SMD)
FB304	1-414-555-21	FERRITE, EMI (SMD)
FB305	1-414-555-21	FERRITE, EMI (SMD)
FB306	1-414-555-21	FERRITE, EMI (SMD)
FB307	1-414-555-21	FERRITE, EMI (SMD)
FB308	1-414-555-21	FERRITE, EMI (SMD)
FB309	1-414-555-21	FERRITE, EMI (SMD)
FB310	1-414-555-21	FERRITE, EMI (SMD)
FB311	1-414-555-21	FERRITE, EMI (SMD)
FB312	1-414-555-21	FERRITE, EMI (SMD)
FB313	1-469-324-21	FERRITE, EMI (SMD)
FB314	1-469-324-21	FERRITE, EMI (SMD)
FB315	1-469-324-21	FERRITE, EMI (SMD)
FB316	1-469-324-21	FERRITE, EMI (SMD)
		<FILTER>
FL201	1-469-642-21	FILTER, EMI (SMD) (2125)
FL202	1-469-642-21	FILTER, EMI (SMD) (2125)
FL203	1-469-642-21	FILTER, EMI (SMD) (2125)
FL301	1-234-601-21	NETWORK, RC (USB) (3216)
FL302	1-234-601-21	NETWORK, RC (USB) (3216)
		<IC>
IC101	8-759-831-20	IC CY2212ZC-2T
IC102	8-759-666-89	IC TC59RM716GB-8(YEL
IC103	8-759-666-89	IC TC59RM716GB-8(YEL
IC104	8-759-699-09	IC CXD9615GB
IC105	8-759-689-90	IC LM74CIMX-3

Reproduction Prohibited

Ref.	Part No.	Description
IC202	8-759-699-08	IC CXD2944GB
IC205	8-759-696-97	IC SC44728APBEB
IC206	8-752-093-56	IC CXA3525R-T4
IC207	8-759-391-69	IC MC78M05CDTRK
IC208	8-759-683-81	IC SN74CBT1G125DCKR
IC209	8-759-697-60	IC MM3071CFBE
IC303	8-759-699-11	IC CXD9619GB
IC305	8-759-496-87	IC T7X16(YEL)
IC306	8-759-688-07	IC MM3051NULE
IC403	8-759-581-11	IC NJM2125F(TE2)
IC404	8-759-689-89	IC SN104809DBTR
IC408	8-759-712-65	IC PQ070XZ01ZP
IC410	8-749-018-42	IC SI-3026LSA-TL
IC501	8-759-699-10	IC CXD9611R
IC502	8-759-712-79	IC K4E151612D-TL50T00
IC503	8-759-824-53	IC MR27V3202E-25TPZ020 **for GH006-11**
IC504	8-752-408-53	IC CXD2942AR
IC505	8-759-830-41	IC TC5364200FT-AE120 **for SCPH-30003,-30004 GH006-21**
IC505	8-759-830-43	IC TC5364200FT-AU120 **for SCPH-30002 GH006-21**
IC506	8-759-830-45	IC MR27V1602E-45TPZ020 **for SCPH-30003,-30004 GH006-11**
IC506	8-759-830-46	IC MR27V1602E-44TPZ020 **for SCPH-30003 GH006-11**
IC517	8-759-667-10	IC CS4335-KS
IC518	8-759-680-49	IC TC7WB125FK(TE85R) **for GH006-21**
IC603	8-759-370-11	IC NJM2100V-TE2
IC604	8-752-919-85	IC CXP102064-302R-T6 **for SCPH-30002**
IC604	8-752-919-95	IC CXP102064-201R-T6 for SCPH-30003,-30004
IC605	8-752-409-02	IC CXD1869AQ
IC606	8-759-712-38	IC HD74HC1G66CME
		<INDUCTOR>
L102	1-414-398-41	INDUCTOR (SMD) 10.0UH
L203	1-469-967-21	INDUCTOR, CHIP 10UH (2518)
L205	1-469-967-21	INDUCTOR, CHIP 10UH (2518)
L206	1-412-956-21	INDUCTOR, SMALL TYPE 27UH (2518)
L401	1-416-948-21	COIL, CHOKE 10UH
L402	1-416-948-21	COIL, CHOKE 10UH
L403	1-419-903-21	COIL (SMD), CHOKE 4.2UH
L404	1-419-905-21	COIL, CHOKE (SMD) 1.82UH
		<COIL>
LF101	1-419-100-21	COIL, COMMON-MODE CHOKE
LF303	1-419-521-21	COIL, COMMOM MODE CHOKE
LF304	1-419-521-21	COIL, COMMOM MODE CHOKE
LF305	1-419-521-21	COIL, COMMOM MODE CHOKE
LF306	1-419-521-21	COIL, COMMOM MODE CHOKE
		<LINK>
⚠ PS001	1-533-940-21	RINK, CHIP IC
⚠ PS002	1-533-940-21	RINK, CHIP IC
PS003	1-533-915-41	RINK, CHIP IC
PS004	1-533-674-21	RINK, CHIP IC
PS005	1-533-940-21	RINK, CHIP IC
		<TRANSISTOR>
Q201	8-729-026-50	TRANSISTOR 2SA1037AK-T146-QR
Q204	8-729-049-77	TRANSISTOR HN1B01F-GR(T5LSONY)
Q205	8-729-013-22	TRANSISTOR HN1A01FU-TE85R
Q401	8-729-051-63	TRANSISTOR SI4884DY-T1
Q402	8-729-053-79	TRANSISTOR IRF7901D1-TR
Q404	8-729-052-07	TRANSISTOR HAT2064R-EL
Q407	8-729-052-41	TRANSISTOR 2SC4541 (2TL SONY1)
Q408	8-729-054-34	TRANSISTOR FDN304P
Q505	8-729-021-09	TRANSISTOR RN4904(TE85R)
Q506	8-729-047-71	TRANSISTOR FMG12-T-148
Q600	8-729-016-26	TRANSISTOR 2SK1958-T1
Q603	8-729-017-33	TRANSISTOR RN1706-TE85R
		<RESISTOR>
R101	1-211-983-91	RES, CHIP 39 (1608)
R102	1-218-826-91	RES, CHIP 130 (1608)
R103	1-211-983-91	RES, CHIP 39 (1608)
R104	1-218-826-91	RES, CHIP 130 (1608)
R105	1-216-864-91	CONDUCTOR, CHIP (1608)
R106	1-216-809-91	RES, CHIP 100 (1608)
R107	1-216-809-91	RES, CHIP 100 (1608)
R109	1-216-829-91	RES, CHIP 4.7K (1608)
R110	1-211-983-91	RES, CHIP 39 (1608)
R111	1-211-983-91	RES, CHIP 39 (1608)
R112	1-211-989-91	RES, CHIP 68 (1608)
R113	1-211-989-91	RES, CHIP 68 (1608)
R114	1-211-983-91	RES, CHIP 39 (1608)
R115	1-211-983-91	RES, CHIP 39 (1608)
R116	1-211-983-91	RES, CHIP 39 (1608)
R117	1-211-983-91	RES, CHIP 39 (1608)
R118	1-211-973-91	RES, CHIP 15 (1608)
R119	1-211-973-91	RES, CHIP 15 (1608)
R120	1-211-973-91	RES, CHIP 15 (1608)
R121	1-211-973-91	RES, CHIP 15 (1608)
R122	1-216-864-91	CONDUCTOR, CHIP (1608)
R123	1-216-864-91	CONDUCTOR, CHIP (1608)
R124	1-216-864-91	CONDUCTOR, CHIP (1608)
R125	1-216-864-91	CONDUCTOR, CHIP (1608)
R126	1-216-833-91	RES, CHIP 10K (1608)
R127	1-216-829-91	RES, CHIP 4.7K (1608)
R128	1-216-829-91	RES, CHIP 4.7K (1608)
R129	1-216-821-91	RES, CHIP 1.0K (1608)
R130	1-216-817-91	RES, CHIP 470 (1608)
R131	1-216-833-91	RES, CHIP 10K (1608)
R132	1-216-833-91	RES, CHIP 10K (1608)
R133	1-216-833-91	RES, CHIP 10K (1608)
R134	1-216-833-91	RES, CHIP 10K (1608)
R135	1-216-864-91	CONDUCTOR, CHIP (1608)
R136	1-216-864-91	CONDUCTOR, CHIP (1608)
R138	1-216-864-91	CONDUCTOR, CHIP (1608)
R139	1-216-801-91	RES, CHIP 22 (1608)
R145	1-216-821-91	RES, CHIP 1.0K (1608)
R146	1-216-821-91	RES, CHIP 1.0K (1608)
R147	1-216-821-91	RES, CHIP 1.0K (1608)
R185	1-216-829-91	RES, CHIP 4.7K (1608)
R188	1-216-829-91	RES, CHIP 4.7K (1608)
R196	1-216-801-91	RES, CHIP 22 (1608)
R202	1-216-833-91	RES, CHIP 10K (1608)
R203	1-216-864-91	CONDUCTOR, CHIP (1608)
R205	1-216-864-91	CONDUCTOR, CHIP (1608)
R208	1-216-864-91	CONDUCTOR, CHIP (1608)
R212	1-216-864-91	CONDUCTOR, CHIP (1608)
R213	1-216-864-91	CONDUCTOR, CHIP (1608)
R215	1-216-864-91	CONDUCTOR, CHIP (1608)
R216	1-216-809-91	RES, CHIP 100 (1608)
R217	1-218-859-91	RES, CHIP 3.3K (1608)
R218	1-218-847-91	RES, CHIP 1.0K (1608)
R219	1-218-851-91	RES, CHIP 1.5K (1608)
R220	1-216-801-91	RES, CHIP 22 (1608)
R225	1-216-833-91	RES, CHIP 10K (1608)
R226	1-218-965-81	RES, CHIP 10K
R227	1-216-864-91	CONDUCTOR, CHIP (1608)
R228	1-218-965-81	RES, CHIP 10K
R233	1-216-821-91	RES, CHIP 1.0K (1608)
R236	1-216-809-91	RES, CHIP 100 (1608)
R237	1-216-829-91	RES, CHIP 4.7K (1608)
R244	1-218-831-91	RES, CHIP 220 (1608)
R245	1-218-831-91	RES, CHIP 220 (1608)
R246	1-218-831-91	RES, CHIP 220 (1608)
R247	1-216-801-91	RES, CHIP 22 (1608)
R251	1-216-837-91	RES, CHIP 22K (1608)
R252	1-216-839-91	RES, CHIP 33K (1608)
R253	1-216-833-91	RES, CHIP 10K (1608)
R257	1-216-824-91	RES, CHIP 1.8K (1608)
R258	1-218-883-91	RES, CHIP 33K (1608)
R259	1-216-824-91	RES, CHIP 1.8K (1608)
R261	1-216-829-91	RES, CHIP 4.7K (1608)
R263	1-216-825-91	RES, CHIP 2.2K (1608)
R264	1-216-821-91	RES, CHIP 1.0K (1608)
R265	1-216-821-91	RES, CHIP 1.0K (1608)
R270	1-218-853-91	RES, CHIP 1.8K (1608)
R272	1-218-859-91	RES, CHIP 3.3K (1608)
R273	1-218-851-91	RES, CHIP 1.5K (1608)
R277	1-218-853-91	RES, CHIP 1.8K (1608)
R278	1-218-859-91	RES, CHIP 3.3K (1608)
R279	1-218-851-91	RES, CHIP 1.5K (1608)
R292	1-216-833-91	RES, CHIP 10K (1608)
R294	1-216-829-91	RES, CHIP 4.7K (1608)
R295	1-216-817-91	RES, CHIP 470 (1608)
R307	1-211-987-91	RES, CHIP 56 (1608)
R308	1-218-864-91	RES, CHIP 5.1K (1608)
R309	1-211-987-91	RES, CHIP 56 (1608)
R310	1-211-987-91	RES, CHIP 56 (1608)
R311	1-216-829-91	RES, CHIP 4.7K (1608)
R312	1-211-987-91	RES, CHIP 56 (1608)
R315	1-218-866-91	RES, CHIP 6.2K (1608)
R316	1-216-797-91	RES, CHIP 10 (1608)
R318	1-216-864-91	CONDUCTOR, CHIP (1608)
R320	1-219-570-91	RES, CHIP 10M (1608)
R321	1-216-813-91	RES, CHIP 220 (1608)
R322	1-218-989-81	RES, CHIP 1M
R324	1-218-965-81	RES, CHIP 10K
R327	1-216-833-91	RES, CHIP 10K (1608)
R328	1-216-841-91	RES, CHIP 47K (1608)
R330	1-216-803-91	RES, CHIP 33 (1608)
R331	1-216-864-91	CONDUCTOR, CHIP (1608)
R332	1-216-817-91	RES, CHIP 470 (1608)
R333	1-216-817-91	RES, CHIP 470 (1608)
R334	1-216-829-91	RES, CHIP 4.7K (1608)
R335	1-216-829-91	RES, CHIP 4.7K (1608)
R336	1-216-821-91	RES, CHIP 1.0K (1608)
R347	1-211-986-91	RES, CHIP 51 (1608)
R349	1-216-821-91	RES, CHIP 1.0K (1608)
R350	1-216-807-91	RES, CHIP 68 (1608)
R351	1-216-805-91	RES, CHIP 47 (1608)
R352	1-216-797-91	RES, CHIP 10 (1608)
R355	1-218-933-81	RES, CHIP 22
R356	1-216-801-91	RES, CHIP 22 (1608)
R357	1-218-933-81	RES, CHIP 22
R358	1-218-933-81	RES, CHIP 22
R359	1-216-801-91	RES, CHIP 22 (1608)
R360	1-216-805-91	RES, CHIP 47 (1608)
R361	1-216-805-91	RES, CHIP 47 (1608)
R362	1-218-937-81	RES, CHIP 47
R363	1-216-864-91	CONDUCTOR, CHIP (1608)
R364	1-216-805-91	RES, CHIP 47 (1608)
R365	1-216-805-91	RES, CHIP 47 (1608)
R366	1-218-937-81	RES, CHIP 47
R367	1-216-805-91	RES, CHIP 47 (1608)
R368	1-216-805-91	RES, CHIP 47 (1608)
R394	1-216-833-91	RES, CHIP 10K (1608)
R395	1-216-825-91	RES, CHIP 2.2K (1608)
R401	1-216-857-91	RES, CHIP 1.0M (1608)
R402	1-216-845-91	RES, CHIP 100K (1608)
R406	1-216-811-91	RES, CHIP 150 (1608)
R407	1-216-811-91	RES, CHIP 150 (1608)
R409	1-218-835-91	RES, CHIP 330 (1608)
R410	1-218-883-91	RES, CHIP 33K (1608)
R411	1-218-883-91	RES, CHIP 33K (1608)
R412	1-218-883-91	RES, CHIP 33K (1608)
R413	1-218-883-91	RES, CHIP 33K (1608)
R414	1-218-835-91	RES, CHIP 330 (1608)
R417	1-216-813-91	RES, CHIP 220 (1608)
R418	1-216-817-91	RES, CHIP 470 (1608)
R421	1-216-790-91	RES, CHIP 2.7 (1608)
R422	1-216-797-91	RES, CHIP 10 (1608)
R423	1-216-790-91	RES, CHIP 2.7 (1608)
R424	1-216-797-91	RES, CHIP 10 (1608)
R425	1-218-985-81	RES, CHIP 470K
R426	1-218-879-91	RES, CHIP 22K (1608)
R427	1-218-875-91	RES, CHIP 15K (1608)
R428	1-216-309-91	RES, CHIP 5.6 (2012)
R430	1-216-813-91	RES, CHIP 220 (1608)
R433	1-216-826-91	RES, CHIP 2.7K (1608)
R438	1-218-850-91	RES, CHIP 1.3K (1608)
R439	1-218-857-91	RES, CHIP 2.7K (1608)
R448	1-216-829-91	RES, CHIP 4.7K (1608)
R451	1-216-813-91	RES, CHIP 220 (1608)
R470	1-216-837-91	RES, CHIP 22K (1608)
R471	1-218-985-81	RES, CHIP 470K
R472	1-218-871-91	RES, CHIP 10K (1608)
R473	1-218-863-91	RES, CHIP 4.7K (1608)
R474	1-216-827-91	RES, CHIP 3.3K (1608)
R475	1-216-822-91	RES, CHIP 1.2K (1608)
R476	1-216-813-91	RES, CHIP 220 (1608)
R477	1-216-816-91	RES, CHIP 390 (1608)
R478	1-216-813-91	RES, CHIP 220 (1608)
R479	1-216-816-91	RES, CHIP 390 (1608)
R496	1-216-864-91	CONDUCTOR,CHIP(1608) **for SCPH-30002**
R497	1-216-864-91	CONDUCTOR,CHIP(1608) **for SCPH-30003,-30004**
R503	1-216-803-91	RES, CHIP 33 (1608)
R504	1-216-803-91	RES, CHIP 33 (1608)
R505	1-216-803-91	RES, CHIP 33 (1608)
R506	1-216-809-91	RES, CHIP 100 (1608)
R507	1-218-937-81	RES, CHIP 47
R509	1-216-821-91	RES, CHIP 1.0K (1608)
R511	1-216-806-91	RES, CHIP 56 (1608)
R513	1-218-937-81	RES, CHIP 47
R514	1-216-806-91	RES, CHIP 56 (1608)
R515	1-216-806-91	RES, CHIP 56 (1608)
R516	1-218-941-81	RES, CHIP 100
R517	1-218-941-81	RES, CHIP 100
R520	1-216-806-91	RES, CHIP 56 (1608)
R521	1-216-806-91	RES, CHIP 56 (1608)
R522	1-216-833-91	RES, CHIP 10K (1608)
R527	1-216-821-91	RES, CHIP 1.0K (1608) **for GH006-21**
R531	1-216-809-91	RES, CHIP 100 (1608)
R574	1-216-812-91	RES, CHIP 180 (1608)
R601	1-216-864-91	CONDUCTOR, CHIP (1608)
R604	1-216-845-91	RES, CHIP 100K (1608)
R606	1-216-833-91	RES, CHIP 10K (1608)
R607	1-218-965-81	RES, CHIP 10K
R613	1-216-833-91	RES, CHIP 10K (1608)
R614	1-218-965-81	RES, CHIP 10K
R615	1-216-864-91	CONDUCTOR, CHIP (1608)
R616	1-216-864-91	CONDUCTOR, CHIP (1608)

Reproduction Prohibited

Ref.	Part No.	Description	
R619	1-216-833-91	RES, CHIP 10K	(1608)
R620	1-216-833-91	RES, CHIP 10K	(1608)
R623	1-216-837-91	RES, CHIP 22K	(1608)
R624	1-216-850-91	RES, CHIP 270K	(1608)
R625	1-216-839-91	RES, CHIP 33K	(1608)
R626	1-218-965-81	RES, CHIP 10K	
R627	1-216-835-91	RES, CHIP 15K	(1608)
R630	1-216-837-91	RES, CHIP 22K	(1608)
R631	1-216-821-91	RES, CHIP 1.0K	(1608)
R632	1-216-821-91	RES, CHIP 1.0K	(1608)
R633	1-216-821-91	RES, CHIP 1.0K	(1608)
R634	1-216-821-91	RES, CHIP 1.0K	(1608)
R636	1-216-864-91	CONDUCTOR, CHIP	(1608)
R640	1-216-837-91	RES, CHIP 22K	(1608)
R642	1-218-965-81	RES, CHIP 10K	
R643	1-216-850-91	RES, CHIP 270K	(1608)
R644	1-216-837-91	RES, CHIP 22K	(1608)
R649	1-216-833-91	RES, CHIP 10K	(1608)
R650	1-218-965-81	RES, CHIP 10K	
R651	1-216-835-91	RES, CHIP 15K	(1608)
R653	1-216-845-91	RES, CHIP 100K	(1608)
R654	1-218-977-81	RES, CHIP 100K	
R657	1-218-971-81	RES, CHIP 33K	
R658	1-218-965-81	RES, CHIP 10K	
R660	1-216-833-91	RES, CHIP 10K	(1608)
R661	1-216-833-91	RES, CHIP 10K	(1608)
R662	1-216-864-91	CONDUCTOR, CHIP	(1608)
R667	1-216-861-91	RES, CHIP 2.2M	(1608)
R668	1-218-985-81	RES, CHIP 470K	
R669	1-218-977-81	RES, CHIP 100K	
R670	1-218-965-81	RES, CHIP 10K	
R671	1-218-959-81	RES, CHIP 3.3K	
R672	1-218-888-91	RES, CHIP 51K	(1608)
R673	1-218-959-81	RES, CHIP 3.3K	
R674	1-218-977-81	RES, CHIP 100K	
R675	1-218-971-81	RES, CHIP 33K	
R678	1-216-829-91	RES, CHIP 4.7K	(1608)
R689	1-218-977-81	RES, CHIP 100K	
R694	1-216-835-91	RES, CHIP 15K	(1608)
R696	1-216-846-91	RES, CHIP 120K	(1608)
R698	1-216-835-91	RES, CHIP 15K	(1608)
R699	1-216-833-91	RES, CHIP 10K	(1608)
R901	1-216-805-91	RES, CHIP 47	(1608)
R902	1-216-805-91	RES, CHIP 47	(1608)
R974	1-216-801-91	RES, CHIP 22	(1608)
R975	1-216-801-91	RES, CHIP 22	(1608)
R984	1-216-864-91	CONDUCTOR, CHIP	(1608)
RB101	1-234-496-21	ARRAY, RESISTOR 39	
RB102	1-234-496-21	ARRAY, RESISTOR 39	
RB103	1-234-496-21	ARRAY, RESISTOR 39	
RB104	1-234-496-21	ARRAY, RESISTOR 39	
RB105	1-234-496-21	ARRAY, RESISTOR 39	
RB106	1-234-496-21	ARRAY, RESISTOR 39	
RB107	1-233-423-21	RES, CHIP NETWORK 47 (3216)	
RB108	1-233-423-21	RES, CHIP NETWORK 47 (3216)	
RB109	1-233-423-21	RES, CHIP NETWORK 47 (3216)	
RB110	1-233-423-21	RES, CHIP NETWORK 47 (3216)	
RB111	1-233-423-21	RES, CHIP NETWORK 47 (3216)	
RB112	1-233-423-21	RES, CHIP NETWORK 47 (3216)	
RB113	1-233-423-21	RES, CHIP NETWORK 47 (3216)	
RB114	1-233-423-21	RES, CHIP NETWORK 47 (3216)	
RB115	1-233-423-21	RES, CHIP NETWORK 47 (3216)	
RB116	1-233-423-21	RES, CHIP NETWORK 47 (3216)	
RB117	1-233-423-21	RES, CHIP NETWORK 47 (3216)	
RB118	1-233-423-21	RES, CHIP NETWORK 47 (3216)	
RB119	1-233-423-21	RES, CHIP NETWORK 47 (3216)	

Ref.	Part No.	Description
RB120	1-233-423-21	RES, CHIP NETWORK 47 (3216)
RB121	1-233-423-21	RES, CHIP NETWORK 47 (3216)
RB122	1-233-423-21	RES, CHIP NETWORK 47 (3216)
RB123	1-233-423-21	RES, CHIP NETWORK 47 (3216)
RB124	1-233-423-21	RES, CHIP NETWORK 47 (3216)
RB125	1-233-423-21	RES, CHIP NETWORK 47 (3216)
RB126	1-233-423-21	RES, CHIP NETWORK 47 (3216)
RB130	1-233-423-21	RES, CHIP NETWORK 47 (3216)
RB131	1-233-423-21	RES, CHIP NETWORK 47 (3216)
RB132	1-233-423-21	RES, CHIP NETWORK 47 (3216)
RB133	1-233-423-21	RES, CHIP NETWORK 47 (3216)
RB134	1-233-423-21	RES, CHIP NETWORK 47 (3216)
RB135	1-233-423-21	RES, CHIP NETWORK 47 (3216)
RB136	1-233-423-21	RES, CHIP NETWORK 47 (3216)
RB137	1-233-423-21	RES, CHIP NETWORK 47 (3216)
RB139	1-233-414-21	RES, CHIP NETWORK 4.7K (3216)
RB241	1-233-414-21	RES, CHIP NETWORK 4.7K (3216)
RB294	1-233-414-21	RES, CHIP NETWORK 4.7K (3216)
RB295	1-233-412-21	RES, CHIP NETWORK 1.0K (3216)
RB296	1-234-598-21	RES, CHIP NETWORK 75X4 (3216)
RB297	1-234-599-21	RES, CHIP NETWORK 180X4 (3216)
RB298	1-234-598-21	RES, CHIP NETWORK 75X4 (3216)
RB303	1-233-412-21	RES, CHIP NETWORK 1.0K (3216)
RB305	1-233-575-21	RES, CHIP NETWORK 22
RB310	1-233-414-21	RES, CHIP NETWORK 4.7K (3216)
RB311	1-233-679-91	RES, NETWORK (1608) 470
RB312	1-233-786-91	RES, NETWORK 220 (1608)
RB314	1-233-681-91	RES, NETWORK (1608) 4.7K
RB317	1-233-423-21	RES, CHIP NETWORK 47 (3216)
RB318	1-233-423-21	RES, CHIP NETWORK 47 (3216)
RB319	1-233-423-21	RES, CHIP NETWORK 47 (3216)
RB320	1-233-423-21	RES, CHIP NETWORK 47 (3216)
RB321	1-233-423-21	RES, CHIP NETWORK 47 (3216)
RB322	1-233-412-21	RES, CHIP NETWORK 1.0K (3216)
RB323	1-233-412-21	RES, CHIP NETWORK 1.0K (3216)
RB324	1-233-412-21	RES, CHIP NETWORK 1.0K (3216)
RB325	1-233-412-21	RES, CHIP NETWORK 1.0K (3216)
RB326	1-233-412-21	RES, CHIP NETWORK 1.0K (3216)
RB327	1-233-415-21	RES, CHIP NETWORK 10K (3216)
RB328	1-233-414-21	RES, CHIP NETWORK 4.7K (3216)
RB329	1-233-783-91	RES, NETWORK 22 (1608)
RB402	1-233-803-91	RES, NETWORK 1.5K (1608)
RB511	1-233-423-21	RES, CHIP NETWORK 47 (3216)
RB512	1-234-610-21	RES, CHIP NETWORK 270K (3216)
RB514	1-233-576-21	RES, CHIP NETWORK 100
RB515	1-234-611-21	RES, CHIP NETWORK 560 (3216)
RB516	1-233-415-21	RES, CHIP NETWORK 10K (3216)
RB517	1-233-575-21	RES, CHIP NETWORK 22
RB518	1-233-575-21	RES, CHIP NETWORK 22
RB519	1-233-575-21	RES, CHIP NETWORK 22
RB520	1-233-575-21	RES, CHIP NETWORK 22
RB521	1-233-575-21	RES, CHIP NETWORK 22
RB522	1-233-575-21	RES, CHIP NETWORK 22
RB523	1-233-575-21	RES, CHIP NETWORK 22
RB524	1-233-575-21	RES, CHIP NETWORK 22
RB525	1-233-575-21	RES, CHIP NETWORK 22
RB526	1-233-575-21	RES, CHIP NETWORK 22
RB527	1-233-575-21	RES, CHIP NETWORK 22
RB528	1-233-575-21	RES, CHIP NETWORK 22
RB529	1-233-575-21	RES, CHIP NETWORK 22
RB530	1-233-575-21	RES, CHIP NETWORK 22
RB531	1-233-575-21	RES, CHIP NETWORK 22
RB532	1-233-575-21	RES, CHIP NETWORK 22
RB602	1-233-415-21	RES, CHIP NETWORK 10K (3216)
RB603	1-233-415-21	RES, CHIP NETWORK 10K (3216)
RB606	1-233-412-21	RES, CHIP NETWORK 1.0K (3216)

Ref.	Part No.	Description
RB607	1-233-415-21	RES, CHIP NETWORK 10K (3216)
RB609	1-233-423-21	RES, CHIP NETWORK 47 (3216)
RB611	1-233-415-21	RES, CHIP NETWORK 10K (3216)
		<CRYSTAL>
X101	1-781-640-21	VIBRATOR, CRYSTAL
X202	1-781-857-21	OSCILLATOR, CRYSTAL
X301	1-781-856-21	VIBRATOR, CRYSTAL
X302	1-781-768-21	VIBRATOR, CRYSTAL

****

A-6712-857-A MOUNTED CIRCUIT BOARD,GH-007-11
for SCPH-30003, -30004
A-6712-860-A MOUNTED CIRCUIT BOARD,GH-007-11
for SCPH-30002
A-6712-858-A MOUNTED CIRCUIT BOARD,GH-007-12
for SCPH-30003, -30004
A-6712-861-A MOUNTED CIRCUIT BOARD,GH-007-12
for SCPH-30002
****
PLACE CODE #25GH

<CAPACITOR>

C101	1-128-964-91	CAP, CHIP TANTALUM ELECT 100MF	
C102	1-128-964-91	CAP, CHIP TANTALUM ELECT 100MF	
C103	1-128-964-91	CAP, CHIP TANTALUM ELECT 100MF	
C104	1-107-826-91	CAP, CHIP CERAMIC 100000PF B	
C105	1-107-826-91	CAP, CHIP CERAMIC 100000PF B	
C106	1-107-826-91	CAP, CHIP CERAMIC 100000PF B	
C107	1-107-826-91	CAP, CHIP CERAMIC 100000PF B	
C108	1-107-826-91	CAP, CHIP CERAMIC 100000PF B	
C109	1-107-826-91	CAP, CHIP CERAMIC 100000PF B	
C110	1-107-826-91	CAP, CHIP CERAMIC 100000PF B	
C111	1-107-826-91	CAP, CHIP CERAMIC 100000PF B	
C112	1-107-826-91	CAP, CHIP CERAMIC 100000PF B	
C113	1-107-826-91	CAP, CHIP CERAMIC 100000PF B	
C114	1-107-826-91	CAP, CHIP CERAMIC 100000PF B	
C115	1-107-826-91	CAP, CHIP CERAMIC 100000PF B	
C116	1-107-826-91	CAP, CHIP CERAMIC 100000PF B	
C117	1-107-826-91	CAP, CHIP CERAMIC 100000PF B	
C118	1-107-826-91	CAP, CHIP CERAMIC 100000PF B	
C119	1-107-826-91	CAP, CHIP CERAMIC 100000PF B	
C120	1-107-826-91	CAP, CHIP CERAMIC 100000PF B	
C121	1-107-826-91	CAP, CHIP CERAMIC 100000PF B	
C122	1-107-826-91	CAP, CHIP CERAMIC 100000PF B	
C123	1-107-826-91	CAP, CHIP CERAMIC 100000PF B	
C124	1-107-826-91	CAP, CHIP CERAMIC 100000PF B	
C125	1-107-826-91	CAP, CHIP CERAMIC 100000PF B	
C126	1-107-826-91	CAP, CHIP CERAMIC 100000PF B	
C127	1-107-826-91	CAP, CHIP CERAMIC 100000PF B	
C128	1-107-826-91	CAP, CHIP CERAMIC 100000PF B	
C129	1-107-826-91	CAP, CHIP CERAMIC 100000PF B	
C131	1-162-970-91	CAP, CERAMIC 10000PF B (1608)	
C132	1-107-826-91	CAP, CHIP CERAMIC 100000PF B	
C134	1-107-826-91	CAP, CHIP CERAMIC 100000PF B	
C135	1-107-826-91	CAP, CHIP CERAMIC 100000PF B	
C136	1-162-964-91	CAP,CHIP CERAMIC 1000PF B (1608)	
C137	1-107-826-91	CAP, CHIP CERAMIC 100000PF B	
C138	1-107-826-91	CAP, CHIP CERAMIC 100000PF B	
C139	1-107-826-91	CAP, CHIP CERAMIC 100000PF B	
C140	1-107-826-91	CAP, CHIP CERAMIC 100000PF B	
C141	1-135-609-91	CAP, CHIP TANTALUM ELECT 220MF	
C142	1-107-826-91	CAP, CHIP CERAMIC 100000PF B	
C143	1-107-826-91	CAP, CHIP CERAMIC 100000PF B	
C144	1-107-826-91	CAP, CHIP CERAMIC 100000PF B	
C145	1-107-826-91	CAP, CHIP CERAMIC 100000PF B	
C146	1-162-964-91	CAP,CHIP CERAMIC 1000PF B (1608)	
C147	1-162-964-91	CAP,CHIP CERAMIC 1000PF B (1608)	

Ref.	Part No.	Description	
C148	1-107-826-91	CAP, CHIP CERAMIC 100000PF B	
C149	1-107-826-91	CAP, CHIP CERAMIC 100000PF B	
C150	1-162-970-91	CAP, CERAMIC 10000PF B	(1608)
C151	1-164-160-91	CAP,CERAMIC 20PF CH	(1608)
C152	1-164-160-91	CAP,CERAMIC 20PF CH	(1608)
C153	1-162-970-91	CAP, CERAMIC 10000PF B	(1608)
C154	1-162-970-91	CAP, CERAMIC 10000PF B	(1608)
C155	1-107-826-91	CAP, CHIP CERAMIC 100000PF B	
C156	1-107-826-91	CAP, CHIP CERAMIC 100000PF B	
C157	1-107-826-91	CAP, CHIP CERAMIC 100000PF B	
C158	1-162-970-91	CAP, CERAMIC 10000PF B	(1608)
C159	1-107-826-91	CAP, CHIP CERAMIC 100000PF B	
C160	1-162-925-91	CAP, CERAMIC 68PF CH	(1608)
C161	1-128-964-91	CAP, CHIP TANTALUM ELECT 100MF	
C162	1-162-925-91	CAP, CERAMIC 68PF CH	(1608)
C163	1-128-964-91	CAP, CHIP TANTALUM ELECT 100MF	
C164	1-128-964-91	CAP, CHIP TANTALUM ELECT 100MF	
C168	1-162-964-91	CAP,CHIP CERAMIC 1000PF B (1608)	
C169	1-162-927-91	CAP, CERAMIC 100PF CH	(1608)
C170	1-125-837-91	CAP, CHIP CERAMIC 1MF B (1608)	
C175	1-107-826-91	CAP, CHIP CERAMIC 100000PF B	
C176	1-107-826-91	CAP, CHIP CERAMIC 100000PF B	
C201	1-107-826-91	CAP, CHIP CERAMIC 100000PF B	
C203	1-107-826-91	CAP, CHIP CERAMIC 100000PF B	
C204	1-162-970-91	CAP, CERAMIC 10000PF B	(1608)
C205	1-107-826-91	CAP, CHIP CERAMIC 100000PF B	
C206	1-162-964-91	CAP,CHIP CERAMIC 1000PF B (1608)	
C208	1-162-964-91	CAP,CHIP CERAMIC 1000PF B (1608)	
C209	1-107-826-91	CAP, CHIP CERAMIC 100000PF B	
C210	1-162-964-91	CAP,CHIP CERAMIC 1000PF B (1608)	
C211	1-107-826-91	CAP, CHIP CERAMIC 100000PF B	
C212	1-107-826-91	CAP, CHIP CERAMIC 100000PF B	
C213	1-107-826-91	CAP, CHIP CERAMIC 100000PF B	
C214	1-107-826-91	CAP, CHIP CERAMIC 100000PF B	
C215	1-107-826-91	CAP, CHIP CERAMIC 100000PF B	
C216	1-107-826-91	CAP, CHIP CERAMIC 100000PF B	
C217	1-107-826-91	CAP, CHIP CERAMIC 100000PF B	
C218	1-107-826-91	CAP, CHIP CERAMIC 100000PF B	
C219	1-107-826-91	CAP, CHIP CERAMIC 100000PF B	
C220	1-107-826-91	CAP, CHIP CERAMIC 100000PF B	
C221	1-107-826-91	CAP, CHIP CERAMIC 100000PF B	
C222	1-125-837-91	CAP, CHIP CERAMIC 1MF B (1608)	
C223	1-125-837-91	CAP, CHIP CERAMIC 1MF B (1608)	
C224	1-125-837-91	CAP, CHIP CERAMIC 1MF B (1608)	
C225	1-125-837-91	CAP, CHIP CERAMIC 1MF B (1608)	
C226	1-107-826-91	CAP, CHIP CERAMIC 100000PF B	
C227	1-107-826-91	CAP, CHIP CERAMIC 100000PF B	
C228	1-125-837-91	CAP, CHIP CERAMIC 1MF B (1608)	
C229	1-125-837-91	CAP, CHIP CERAMIC 1MF B (1608)	
C230	1-125-837-91	CAP, CHIP CERAMIC 1MF B (1608)	
C231	1-107-826-91	CAP, CHIP CERAMIC 100000PF B	
C232	1-107-826-91	CAP, CHIP CERAMIC 100000PF B	
C233	1-125-837-91	CAP, CHIP CERAMIC 1MF B (1608)	
C234	1-125-837-91	CAP, CHIP CERAMIC 1MF B (1608)	
C235	1-125-837-91	CAP, CHIP CERAMIC 1MF B (1608)	
C236	1-107-826-91	CAP, CHIP CERAMIC 100000PF B	
C237	1-107-826-91	CAP, CHIP CERAMIC 100000PF B	
C238	1-125-837-91	CAP, CHIP CERAMIC 1MF B (1608)	
C239	1-107-826-91	CAP, CHIP CERAMIC 100000PF B	
C240	1-125-837-91	CAP, CHIP CERAMIC 1MF B (1608)	
C241	1-125-837-91	CAP, CHIP CERAMIC 1MF B (1608)	
C242	1-128-707-22	CAP, TANTALUM ELECT (SMD)220	
C243	1-128-707-22	CAP, TANTALUM ELECT (SMD)220	
C244	1-135-609-91	CAP, CHIP TANTALUM ELECT 220MF	
C245	1-128-707-22	CAP, TANTALUM ELECT (SMD)220	
C246	1-135-609-91	CAP, CHIP TANTALUM ELECT 220MF	

Reproduction Prohibited

Ref.	Part No.	Description
C247	1-107-826-91	CAP, CHIP CERAMIC 100000PF B
C248	1-107-826-91	CAP, CHIP CERAMIC 100000PF B
C249	1-115-156-91	CAP, CERAMIC 1000000PF F (1608)
C250	1-127-760-91	CAP, CERAMIC 4.7MF (2012)
C252	1-107-826-91	CAP, CHIP CERAMIC 100000PF B
C254	1-107-826-91	CAP, CHIP CERAMIC 100000PF B
C255	1-107-826-91	CAP, CHIP CERAMIC 100000PF B
C256	1-107-826-91	CAP, CHIP CERAMIC 100000PF B
C257	1-125-837-91	CAP, CHIP CERAMIC 1MF B (1608)
C261	1-128-004-21	CAP, ELECT (CHIP) 10MF
C262	1-128-004-21	CAP, ELECT (CHIP) 10MF
C263	1-128-004-21	CAP, ELECT (CHIP) 10MF
C265	1-117-720-91	CAP, CERAMIC 4.7MF F (2012)
C266	1-128-004-21	CAP, ELECT (CHIP) 10MF
C267	1-126-210-21	CAP, ELECT 220MF
C268	1-126-210-21	CAP, ELECT 220MF
C269	1-164-160-91	CAP,CERAMIC 20PF CH (1608)
C270	1-125-777-81	CAP, CHIP CERAMIC 0.1MF B (1005)
C271	1-125-777-81	CAP, CHIP CERAMIC 0.1MF B (1005)
C272	1-125-777-81	CAP, CHIP CERAMIC 0.1MF B (1005)
C275	1-125-777-81	CAP, CHIP CERAMIC 0.1MF B (1005)
C276	1-164-874-81	CAP,CHIP CERAMIC 100PF CH (1005)
C277	1-164-874-81	CAP,CHIP CERAMIC 100PF CH (1005)
C278	1-113-619-91	CAP, CERAMIC 470000PF F (1608)
C279	1-113-619-91	CAP, CERAMIC 470000PF F (1608)
C282	1-113-619-91	CAP, CERAMIC 470000PF F (1608)
C285	1-113-619-91	CAP, CERAMIC 470000PF F (1608)
C286	1-113-619-91	CAP, CERAMIC 470000PF F (1608)
C287	1-107-826-91	CAP, CHIP CERAMIC 100000PF B
C288	1-125-837-91	CAP, CHIP CERAMIC 1MF B (1608)
C289	1-164-937-81	CAP, CHIPCERAMIC 1000PF B (1005)
C290	1-113-619-91	CAP, CERAMIC 470000PF F (1608)
C291	1-162-923-91	CAP, CERAMIC 47PF CH (1608)
C292	1-107-725-91	CAP, CERAMIC 100000PF B (2012)
C293	1-137-765-21	CAP, ELECT 47MF
C296	1-126-210-21	CAP, ELECT 220MF
C297	1-126-210-21	CAP, ELECT 220MF
C298	1-126-210-21	CAP, ELECT 220MF
C302	1-125-777-81	CAP, CHIP CERAMIC 0.1MF B (1005)
C303	1-125-777-81	CAP, CHIP CERAMIC 0.1MF B (1005)
C304	1-164-937-81	CAP, CHIPCERAMIC 1000PF B (1005)
C306	1-164-387-91	CAP, CERAMIC 240PF CH (1608)
C307	1-107-826-91	CAP, CHIP CERAMIC 100000PF B
C308	1-165-112-91	CAP, CERAMIC 330000PF F (1608)
C309	1-162-970-91	CAP, CERAMIC 10000PF B (1608)
C310	1-162-970-91	CAP, CERAMIC 10000PF B (1608)
C311	1-162-916-91	CAP, CERAMIC 12PF CH (1608)
C312	1-162-917-91	CAP, CERAMIC 15PF CH (1608)
C313	1-162-910-91	CAP, CERAMIC 5.0PF CH (1608)
C314	1-162-910-91	CAP, CERAMIC 5.0PF CH (1608)
C315	1-125-777-81	CAP, CHIP CERAMIC 0.1MF B (1005)
C316	1-165-112-91	CAP, CERAMIC 330000PF F (1608)
C317	1-162-970-91	CAP, CERAMIC 10000PF B (1608)
C318	1-162-970-91	CAP, CERAMIC 10000PF B (1608)
C319	1-162-970-91	CAP, CERAMIC 10000PF B (1608)
C320	1-162-970-91	CAP, CERAMIC 10000PF B (1608)
C321	1-162-970-91	CAP, CERAMIC 10000PF B (1608)
C322	1-162-970-91	CAP, CERAMIC 10000PF B (1608)
C323	1-162-970-91	CAP, CERAMIC 10000PF B (1608)
C325	1-162-970-91	CAP, CERAMIC 10000PF B (1608)
C326	1-162-970-91	CAP, CERAMIC 10000PF B (1608)
C327	1-162-970-91	CAP, CERAMIC 10000PF B (1608)
C328	1-162-970-91	CAP, CERAMIC 10000PF B (1608)
C329	1-162-970-91	CAP, CERAMIC 10000PF B (1608)
C330	1-162-970-91	CAP, CERAMIC 10000PF B (1608)
C331	1-162-970-91	CAP, CERAMIC 10000PF B (1608)

Ref.	Part No.	Description
C332	1-162-970-91	CAP, CERAMIC 10000PF B (1608)
C333	1-162-970-91	CAP, CERAMIC 10000PF B (1608)
C334	1-162-970-91	CAP, CERAMIC 10000PF B (1608)
C335	1-162-970-91	CAP, CERAMIC 10000PF B (1608)
C336	1-162-970-91	CAP, CERAMIC 10000PF B (1608)
C337	1-162-970-91	CAP, CERAMIC 10000PF B (1608)
C338	1-107-826-91	CAP, CHIP CERAMIC 100000PF B
C339	1-125-764-41	CAP, CHIP CERAMIC 100PF CH
C340	1-125-764-41	CAP, CHIP CERAMIC 100PF CH
C341	1-125-764-41	CAP, CHIP CERAMIC 100PF CH
C355	1-107-826-91	CAP, CHIP CERAMIC 100000PF B
C356	1-107-826-91	CAP, CHIP CERAMIC 100000PF B
C363	1-107-826-91	CAP, CHIP CERAMIC 100000PF B
C364	1-107-826-91	CAP, CHIP CERAMIC 100000PF B
C365	1-107-826-91	CAP, CHIP CERAMIC 100000PF B
C366	1-107-826-91	CAP, CHIP CERAMIC 100000PF B
C367	1-107-826-91	CAP, CHIP CERAMIC 100000PF B
C368	1-125-777-81	CAP, CHIP CERAMIC 0.1MF B (1005)
C369	1-125-777-81	CAP, CHIP CERAMIC 0.1MF B (1005)
C370	1-162-964-91	CAP,CHIP CERAMIC 1000PF B (1608)
C371	1-162-964-91	CAP,CHIP CERAMIC 1000PF B (1608)
C372	1-128-995-21	CAP, ELECT 100MF
C373	1-128-995-21	CAP, ELECT 100MF
C401	1-162-964-91	CAP,CHIP CERAMIC 1000PF B (1608)
C409	1-162-969-91	CAP, CERAMIC 6800PF B (1608)
C414	1-162-965-91	CAP, CERAMIC 1500PF B (1608)
C415	1-165-176-91	CAP,CERAMIC 47000PF B (1608)
C416	1-107-826-91	CAP, CHIP CERAMIC 100000PF B
C417	1-164-379-91	CAP, CERAMIC 43PF CH (1608)
C418	1-107-826-91	CAP, CHIP CERAMIC 100000PF B
C419	1-162-970-91	CAP, CERAMIC 10000PF B (1608)
C420	1-107-826-91	CAP, CHIP CERAMIC 100000PF B
C421	1-127-692-91	CAP, CHIP CERAMIC 10MF B (3225)
C422	1-135-347-21	CAP, SOLID ELECT 82MF
C423	1-135-347-21	CAP, SOLID ELECT 82MF
C424	1-127-692-91	CAP, CHIP CERAMIC 10MF B (3225)
C427	1-135-347-21	CAP, SOLID ELECT 82MF
C430	1-107-826-91	CAP, CHIP CERAMIC 100000PF B
C431	1-107-826-91	CAP, CHIP CERAMIC 100000PF B
C432	1-115-339-91	CAP, CERAMIC 0.1MF B (2012)
C433	1-115-339-91	CAP, CERAMIC 0.1MF B (2012)
C435	1-115-566-91	CAP, CERAMIC 4.7MF B
C436	1-135-593-21	CAP, ELECT 150MF
C437	1-107-826-91	CAP, CHIP CERAMIC 100000PF B
C438	1-107-826-91	CAP, CHIP CERAMIC 100000PF B
C439	1-135-593-21	CAP, ELECT 150MF
C440	1-135-592-21	CAP, ELECT 100MF
C441	1-135-593-21	CAP, ELECT 150MF
C443	1-135-592-21	CAP, ELECT 100MF
C444	1-107-826-91	CAP, CHIP CERAMIC 100000PF B
C446	1-135-592-21	CAP, ELECT 100MF
C447	1-107-682-91	CAP, CERAMIC 1000000PF B (3216)
C450	1-107-826-91	CAP, CHIP CERAMIC 100000PF B
C457	1-124-779-21	CAP, ELECT 10MF
C466	1-107-826-91	CAP, CHIP CERAMIC 100000PF B
C468	1-126-209-21	CAP, ELECT 100MF
C477	1-124-779-21	CAP, ELECT 10MF
C490	1-126-209-21	CAP, ELECT 100MF
C491	1-117-681-21	CAP, ELECT 100MF
C492	1-107-826-91	CAP, CHIP CERAMIC 100000PF B
C494	1-125-777-81	CAP, CHIP CERAMIC 0.1MF B (1005)
C495	1-107-826-91	CAP, CHIP CERAMIC 100000PF B
C496	1-125-837-91	CAP, CHIP CERAMIC 1MF B (1608)
C500	1-117-720-91	CAP, CERAMIC 4.7MF F (2012)
C501	1-117-720-91	CAP, CERAMIC 4.7MF F (2012)
C503	1-107-725-91	CAP, CERAMIC 100000PF B (2012)

Ref.	Part No.	Description
C504	1-117-720-91	CAP, CERAMIC 4.7MF F (2012)
C505	1-113-619-91	CAP, CERAMIC 470000PF F (1608) for SCPH-30002 GH007-11
C506	1-107-826-91	CAP, CHIP CERAMIC 100000PF B
C508	1-113-619-91	CAP, CERAMIC 470000PF F (1608)
C509	1-113-619-91	CAP, CERAMIC 470000PF F (1608)
C510	1-113-619-91	CAP, CERAMIC 470000PF F (1608)
C511	1-162-964-91	CAP,CHIP CERAMIC 1000PF B (1608)
C512	1-113-619-91	CAP, CERAMIC 470000PF F (1608) for SCPH-30002 GH007-11
C513	1-113-619-91	CAP, CERAMIC 470000PF F (1608)
C514	1-113-619-91	CAP, CERAMIC 470000PF F (1608)
C516	1-113-619-91	CAP, CERAMIC 470000PF F (1608)
C517	1-113-619-91	CAP, CERAMIC 470000PF F (1608)
C518	1-113-619-91	CAP, CERAMIC 470000PF F (1608)
C520	1-164-874-81	CAP, CHIP CERAMIC 100PF CH (1005)
C521	1-125-837-91	CAP, CHIP CERAMIC 1MF B (1608)
C522	1-164-156-91	CAP, CHIP CERAMIC 0.1MF F (1608)
C523	1-107-726-91	CAP, CHIP CERAMIC 10000PF B(1608)
C524	1-113-619-91	CAP, CERAMIC 470000PF F (1608)
C525	1-113-619-91	CAP, CERAMIC 470000PF F (1608)
C526	1-164-156-91	CAP, CHIP CERAMIC 0.1MF F (1608) for SCPH-30002 GH007-21
C527	1-162-964-91	CAP, CHIP CERAMIC 1000PF B (1608)
C528	1-125-837-91	CAP, CHIP CERAMIC 1MF B (1608)
C529	1-128-008-21	CAP, ELECT (CHIP) 3.3MF
C530	1-128-008-21	CAP, ELECT (CHIP) 3.3MF
C532	1-164-874-81	CAP, CHIP CERAMIC 100PF CH (1005)
C533	1-113-619-91	CAP, CERAMIC 470000PF F (1608)
C534	1-113-619-91	CAP, CERAMIC 470000PF F (1608)
C535	1-113-619-91	CAP, CERAMIC 470000PF F (1608)
C536	1-113-619-91	CAP, CERAMIC 470000PF F (1608)
C537	1-113-619-91	CAP, CERAMIC 470000PF F (1608)
C538	1-113-619-91	CAP, CERAMIC 470000PF F (1608)
C539	1-113-619-91	CAP, CERAMIC 470000PF F (1608)
C540	1-113-619-91	CAP, CERAMIC 470000PF F (1608)
C541	1-113-619-91	CAP, CERAMIC 470000PF F (1608)
C542	1-164-874-81	CAP, CHIP CERAMIC 100PF CH (1005)
C543	1-113-619-91	CAP, CERAMIC 470000PF F (1608)
C601	1-164-156-91	CAP, CHIP CERAMIC 0.1MF F (1608)
C603	1-164-937-81	CAP, CHIPCERAMIC 1000PF B (1005)
C605	1-164-937-81	CAP, CHIPCERAMIC 1000PF B (1005)
C606	1-162-964-91	CAP, CHIP CERAMIC 1000PF B (1608)
C607	1-162-968-91	CAP, CHIP CERAMIC 4700PF B (1608)
C609	1-107-826-91	CAP, CHIP CERAMIC 100000PF B
C623	1-164-156-91	CAP, CHIP CERAMIC 0.1MF F (1608)
C624	1-107-826-91	CAP, CHIP CERAMIC 100000PF B
C625	1-164-156-91	CAP, CHIP CERAMIC 0.1MF F (1608)
C627	1-162-966-91	CAP, CERAMIC 2200PF B (1608)
C628	1-162-966-91	CAP, CERAMIC 2200PF B (1608)
C629	1-164-156-91	CAP, CHIP CERAMIC 0.1MF F (1608)
C630	1-164-173-91	CAP, CERAMIC 3900PF B (1608)
C631	1-162-968-91	CAP, CHIP CERAMIC 4700PF B (1608)
C632	1-107-826-91	CAP, CHIP CERAMIC 100000PF B
C633	1-164-156-91	CAP, CHIP CERAMIC 0.1MF F (1608)
C634	1-164-156-91	CAP, CHIP CERAMIC 0.1MF F (1608)
C635	1-162-968-91	CAP, CHIP CERAMIC 4700PF B (1608)
C636	1-125-777-81	CAP, CHIP CERAMIC 0.1MF B (1005)
C637	1-164-937-81	CAP, CHIPCERAMIC 1000PF B (1005)
C638	1-164-943-81	CAP, CHIP CERAMIC 10000PF B (1005)
C639	1-164-217-91	CAP, CERAMIC 150PF CH (1608)
C640	1-135-259-91	CAP, CHIP TANTALUM ELECT 10MF
C642	1-164-156-91	CAP, CHIP CERAMIC 0.1MF F (1608)
C643	1-125-777-81	CAP, CHIP CERAMIC 0.1MF B (1005)
C644	1-164-882-81	CAP, CHIP CERAMIC 220PF CH (1005)
C645	1-165-176-91	CAP, CERAMIC 47000PF B (1608)

Ref.	Part No.	Description
C646	1-164-937-81	CAP, CHIPCERAMIC 1000PF B (1005)
C647	1-117-863-91	CAP, CHIP CERAMIC0.47MF B (1608)
C648	1-107-820-81	CAP, CHIP CERAMIC 100000PF F
C649	1-164-943-81	CAP, CHIP CERAMIC 10000PF B (1005)
C650	1-164-882-81	CAP, CHIP CERAMIC 220PF CH (1005)
C651	1-164-939-81	CAP, CHIPCERAMIC 2200PF B (1005)
C652	1-125-777-81	CAP, CHIP CERAMIC 0.1MF B (1005)
C653	1-164-939-81	CAP, CHIPCERAMIC 2200PF B (1005)
C654	1-164-156-91	CAP, CHIP CERAMIC 0.1MF F (1608)
C655	1-135-259-91	CAP, CHIP TANTALUM ELECT 10MF
C656	1-107-820-81	CAP, CHIP CERAMIC 100000PF F
C657	1-164-230-91	CAP, CERAMIC 220PF CH (1608)
C658	1-164-882-81	CAP, CHIP CERAMIC 220PF CH (1005)
C660	1-125-777-81	CAP, CHIP CERAMIC 0.1MF B (1005)
C661	1-107-820-81	CAP, CHIP CERAMIC 100000PF F
C662	1-164-156-91	CAP, CHIP CERAMIC 0.1MF F (1608)
C663	1-164-156-91	CAP, CHIP CERAMIC 0.1MF F (1608)
C664	1-135-259-91	CAP, CHIP TANTALUM ELECT 10MF
C665	1-107-820-81	CAP, CHIP CERAMIC 100000PF F
C666	1-107-820-81	CAP, CHIP CERAMIC 100000PF F
C667	1-107-820-81	CAP, CHIP CERAMIC 100000PF F
C668	1-107-826-91	CAP, CHIP CERAMIC 100000PF B
C671	1-164-156-91	CAP, CHIP CERAMIC 0.1MF F (1608)
C672	1-164-156-91	CAP, CHIP CERAMIC 0.1MF F (1608)
C673	1-164-156-91	CAP, CHIP CERAMIC 0.1MF F (1608)
C674	1-164-156-91	CAP, CHIP CERAMIC 0.1MF F (1608)
C675	1-107-820-81	CAP, CHIP CERAMIC 100000PF F
C676	1-107-820-81	CAP, CHIP CERAMIC 100000PF F
C680	1-162-964-91	CAP, CHIP CERAMIC 1000PF B (1608)
C685	1-117-863-91	CAP, CHIP CERAMIC0.47MF B (1608)
C688	1-162-964-91	CAP, CHIP CERAMIC 1000PF B (1608)
C689	1-162-968-91	CAP, CHIP CERAMIC 4700PF B (1608)
C901	1-107-826-91	CAP, CHIP CERAMIC 100000PF B
C902	1-107-826-91	CAP, CHIP CERAMIC 100000PF B
C903	1-107-826-91	CAP, CHIP CERAMIC 100000PF B
C904	1-107-826-91	CAP, CHIP CERAMIC 100000PF B
C905	1-107-826-91	CAP, CHIP CERAMIC 100000PF B
C906	1-107-826-91	CAP, CHIP CERAMIC 100000PF B
C907	1-107-826-91	CAP, CHIP CERAMIC 100000PF B
C908	1-107-826-91	CAP, CHIP CERAMIC 100000PF B
C909	1-107-826-91	CAP, CHIP CERAMIC 100000PF B
C910	1-107-826-91	CAP, CHIP CERAMIC 100000PF B
C911	1-107-826-91	CAP, CHIP CERAMIC 100000PF B
C912	1-107-826-91	CAP, CHIP CERAMIC 100000PF B
C913	1-107-826-91	CAP, CHIP CERAMIC 100000PF B
C914	1-107-826-91	CAP, CHIP CERAMIC 100000PF B
C915	1-107-826-91	CAP, CHIP CERAMIC 100000PF B
C916	1-107-826-91	CAP, CHIP CERAMIC 100000PF B
C917	1-107-826-91	CAP, CHIP CERAMIC 100000PF B
C918	1-107-826-91	CAP, CHIP CERAMIC 100000PF B
C919	1-107-826-91	CAP, CHIP CERAMIC 100000PF B
C920	1-107-826-91	CAP, CHIP CERAMIC 100000PF B
C921	1-107-826-91	CAP, CHIP CERAMIC 100000PF B
C922	1-107-826-91	CAP, CHIP CERAMIC 100000PF B
C923	1-107-826-91	CAP, CHIP CERAMIC 100000PF B
C924	1-107-826-91	CAP, CHIP CERAMIC 100000PF B
C925	1-107-826-91	CAP, CHIP CERAMIC 100000PF B
C926	1-107-826-91	CAP, CHIP CERAMIC 100000PF B
C927	1-107-826-91	CAP, CHIP CERAMIC 100000PF B
C928	1-107-826-91	CAP, CHIP CERAMIC 100000PF B
C929	1-107-826-91	CAP, CHIP CERAMIC 100000PF B
C930	1-107-826-91	CAP, CHIP CERAMIC 100000PF B
C931	1-107-826-91	CAP, CHIP CERAMIC 100000PF B
C932	1-107-826-91	CAP, CHIP CERAMIC 100000PF B
C933	1-107-826-91	CAP, CHIP CERAMIC 100000PF B
C934	1-107-826-91	CAP, CHIP CERAMIC 100000PF B

Reproduction Prohibited

Ref.	Part No.	Description
C935	1-107-826-91	CAP, CHIP CERAMIC 100000PF B
C936	1-107-826-91	CAP, CHIP CERAMIC 100000PF B
C937	1-107-826-91	CAP, CHIP CERAMIC 100000PF B
C938	1-107-826-91	CAP, CHIP CERAMIC 100000PF B
C939	1-107-826-91	CAP, CHIP CERAMIC 100000PF B
C940	1-107-826-91	CAP, CHIP CERAMIC 100000PF B
C941	1-107-826-91	CAP, CHIP CERAMIC 100000PF B
C942	1-107-826-91	CAP, CHIP CERAMIC 100000PF B
C943	1-107-826-91	CAP, CHIP CERAMIC 100000PF B
C944	1-107-826-91	CAP, CHIP CERAMIC 100000PF B
C945	1-107-826-91	CAP, CHIP CERAMIC 100000PF B
C946	1-107-826-91	CAP, CHIP CERAMIC 100000PF B
C947	1-107-826-91	CAP, CHIP CERAMIC 100000PF B
C948	1-107-826-91	CAP, CHIP CERAMIC 100000PF B
C949	1-107-826-91	CAP, CHIP CERAMIC 100000PF B
C950	1-107-826-91	CAP, CHIP CERAMIC 100000PF B
C951	1-107-826-91	CAP, CHIP CERAMIC 100000PF B
C952	1-107-826-91	CAP, CHIP CERAMIC 100000PF B
C953	1-107-826-91	CAP, CHIP CERAMIC 100000PF B
C954	1-107-826-91	CAP, CHIP CERAMIC 100000PF B
C955	1-107-826-91	CAP, CHIP CERAMIC 100000PF B
C956	1-107-826-91	CAP, CHIP CERAMIC 100000PF B
C957	1-107-826-91	CAP, CHIP CERAMIC 100000PF B
C958	1-107-826-91	CAP, CHIP CERAMIC 100000PF B
C959	1-107-826-91	CAP, CHIP CERAMIC 100000PF B
C960	1-107-826-91	CAP, CHIP CERAMIC 100000PF B
C961	1-107-826-91	CAP, CHIP CERAMIC 100000PF B
C962	1-107-826-91	CAP, CHIP CERAMIC 100000PF B
C963	1-107-826-91	CAP, CHIP CERAMIC 100000PF B
C965	1-107-826-91	CAP, CHIP CERAMIC 100000PF B
C966	1-107-826-91	CAP, CHIP CERAMIC 100000PF B
C967	1-125-837-91	CAP, CHIP CERAMIC 1MF B (1608)
C968	1-125-837-91	CAP, CHIP CERAMIC 1MF B (1608)
C980	1-107-826-91	CAP, CHIP CERAMIC 100000PF B
C981	1-125-837-91	CAP, CHIP CERAMIC 1MF B (1608)
C982	1-107-826-91	CAP, CHIP CERAMIC 100000PF B
C983	1-125-837-91	CAP, CHIP CERAMIC 1MF B (1608)
C984	1-107-826-91	CAP, CHIP CERAMIC 100000PF B
C985	1-107-826-91	CAP, CHIP CERAMIC 100000PF B
C986	1-107-826-91	CAP, CHIP CERAMIC 100000PF B
C987	1-107-826-91	CAP, CHIP CERAMIC 100000PF B
C988	1-125-837-91	CAP, CHIP CERAMIC 1MF B (1608)
C989	1-107-826-91	CAP, CHIP CERAMIC 100000PF B
C990	1-107-826-91	CAP, CHIP CERAMIC 100000PF B
		<CONNECTOR>
CN201	1-794-209-11	CONNECTOR, SQUARE TYPE 12P
CN301	1-794-208-11	CONNECTOR, SQUARE TYPE 4P
CN302	1-794-206-21	CONNECTOR, FFC/FPC (ZIF) 36P
CN303	1-794-207-11	CONNECTOR, USB 8P
CN403	1-770-619-21	PIN, CONNECTOR 2P
CN406	1-815-226-21	CONNECTOR, FFC/FPC (ZIF) 40P
CN407	1-815-301-11	PIN, CONNECTOR 4P
CN408	1-815-302-11	PIN, CONNECTOR (PLUG) 34P
CN501	1-418-965-11	TRANSMITTER UNIT, LIGHT
CN504	1-815-190-21	CONNECTOR BOARD TO BOARD 110P
CN604	1-793-823-21	CONNECTOR, FFC/FPC (ZIF) 54P
		<NETWORK>
CP201	1-234-605-21	NETWORK, RC
		<DIODE>
D201	8-719-065-78	DIODE MAZF12000LS0
D202	8-719-064-61	DIODE 01BZA8.2(TE85L)
D203	8-719-064-61	DIODE 01BZA8.2(TE85L)
D204	8-719-064-61	DIODE 01BZA8.2(TE85L)
D205	8-719-064-61	DIODE 01BZA8.2(TE85L)
D206	8-719-064-61	DIODE 01BZA8.2(TE85L)
D208	8-719-064-61	DIODE 01BZA8.2(TE85L)
D209	8-719-064-61	DIODE 01BZA8.2(TE85L)
D210	8-719-064-61	DIODE 01BZA8.2(TE85L)
D301	8-719-071-87	DIODE MA785-(TX),SO
D302	8-719-071-87	DIODE MA785-(TX),SO
D402	8-719-074-34	DIODE RB495D-T146
D403	8-719-074-34	DIODE RB495D-T146
D405	8-719-078-04	DIODE EC31QS03L-TE12L
D500	8-719-941-21	DIODE DAP202UT106
D501	8-719-082-76	DIODE CL-201TLY-C-TU
		<FUSE>
⚠ F001	1-576-434-21	FUSE, CHIP
⚠ F002	1-576-434-21	FUSE, CHIP
		<FERRITE BEAD>
FB102	1-469-667-21	FERRITE, EMI (SMD)
FB103	1-469-667-21	FERRITE, EMI (SMD)
FB201	1-414-813-21	FERRITE, EMI (SMD)
FB202	1-500-113-22	BEAD, FERRITE (CHIP)
FB203	1-500-113-22	BEAD, FERRITE (CHIP)
FB204	1-500-113-22	BEAD, FERRITE (CHIP)
FB205	1-500-113-22	BEAD, FERRITE (CHIP)
FB206	1-500-113-22	BEAD, FERRITE (CHIP)
FB207	1-469-667-21	FERRITE, EMI (SMD)
FB208	1-469-667-21	FERRITE, EMI (SMD)
FB303	1-414-555-21	FERRITE, EMI (SMD)
FB304	1-414-555-21	FERRITE, EMI (SMD)
FB305	1-414-555-21	FERRITE, EMI (SMD)
FB306	1-414-555-21	FERRITE, EMI (SMD)
FB307	1-414-555-21	FERRITE, EMI (SMD)
FB308	1-414-555-21	FERRITE, EMI (SMD)
FB309	1-414-555-21	FERRITE, EMI (SMD)
FB310	1-414-555-21	FERRITE, EMI (SMD)
FB311	1-414-555-21	FERRITE, EMI (SMD)
FB312	1-414-555-21	FERRITE, EMI (SMD)
FB313	1-469-324-21	FERRITE, EMI (SMD)
FB314	1-469-324-21	FERRITE, EMI (SMD)
FB315	1-469-324-21	FERRITE, EMI (SMD)
FB316	1-469-324-21	FERRITE, EMI (SMD)
		<FILTER>
FL201	1-469-642-21	FILTER, EMI (SMD) (2125)
FL202	1-469-642-21	FILTER, EMI (SMD) (2125)
FL203	1-469-642-21	FILTER, EMI (SMD) (2125)
FL301	1-234-601-21	NETWORK, RC (USB) (3216)
FL302	1-234-601-21	NETWORK, RC (USB) (3216)
		<IC>
IC101	8-759-831-20	IC CY2212ZC-2T
IC102	8-759-666-89	IC TC59RM716GB-8(YEL
IC103	8-759-666-89	IC TC59RM716GB-8(YEL
IC104	8-759-699-09	IC CXD9615GB
IC105	8-759-689-90	IC LM74CIMX-3
IC201	8-759-831-20	IC CY2212ZC-2T
IC202	8-752-404-01	IC CXD2934GB-T7
IC205	8-759-696-97	IC SC44728APBEB
IC206	8-752-093-56	IC CXA3525R-T4
IC207	8-759-391-69	IC MC78M05CDTRK
IC209	8-759-697-60	IC MM3071CFBE
IC303	8-759-699-11	IC CXD9619GB
IC305	8-759-496-87	IC T7X16(YEL)
IC306	8-759-688-07	IC MM3051NULE
IC306	8-759-697-24	IC S-817A12ANB-CUB-T2
IC403	8-759-581-11	IC NJM2125F(TE2)
IC404	8-759-689-89	IC SN104809DBTR
IC408	8-759-712-65	IC PQ070XZ01ZP
IC410	8-749-018-42	IC SI-3026LSA-TL
IC501	8-759-699-10	IC CXD9611R
IC502	8-759-712-79	IC K4E151612D-TL50T00
IC503	8-759-824-53	IC MR27V3202E-25TPZ020 **for GH007-11**
IC504	8-752-408-53	IC CXD2942AR
IC505	8-759-830-41	IC TC5364200FT-AE120 **for SCPH-30003,-30004 GH007-21**
IC505	8-759-830-43	IC TC5364200FT-AU120 **for SCPH-30002 GH007-21**
IC506	8-759-830-46	IC MR27V1602E-44TPZ020 **for SCPH-30003,-30004 GH007-11**
IC506	8-759-830-45	IC MR27V1602E-45TPZ020 **for SCPH-30002 GH007-11**
IC517	8-759-667-10	IC CS4335-KS
IC518	8-759-680-49	IC TC7WB125FK(TE85R) **for GH007-21**
IC603	8-759-370-11	IC NJM2100V-TE2
IC604	8-752-919-95	IC CXP102064-201R-T6 **for SCPH-30003,-30004 GH007**
IC604	8-752-919-85	IC CXP102064-201R-T6 **for SCPH-30002 GH007**
IC605	8-752-409-02	IC CXD1869AQ
IC606	8-759-712-38	IC HD74HC1G66CME
		<INDUCTOR>
L102	1-414-398-41	INDUCTOR (SMD) 10.0UH
L202	1-414-398-41	INDUCTOR (SMD) 10.0UH
L203	1-469-967-21	INDUCTOR, CHIP 10UH (2518)
L206	1-412-956-21	INDUCTOR, SMALL TYPE 27UH (2518)
L401	1-416-948-21	COIL, CHOKE 10UH
L402	1-416-948-21	COIL, CHOKE 10UH
L403	1-419-491-21	COIL, CHOKE 10UH
L404	1-419-905-21	COIL, CHOKE (SMD) 1.82UH
		<COIL>
LF101	1-419-100-21	COIL, COMMON-MODE CHOKE
LF303	1-419-521-21	COIL, COMMOM MODE CHOKE
LF304	1-419-521-21	COIL, COMMOM MODE CHOKE
LF305	1-419-521-21	COIL, COMMOM MODE CHOKE
LF306	1-419-521-21	COIL, COMMOM MODE CHOKE
		<LINK>
⚠ PS001	1-533-940-21	RINK, CHIP IC
⚠ PS002	1-533-940-21	RINK, CHIP IC
PS003	1-533-915-41	RINK, CHIP IC
PS004	1-533-674-21	RINK, CHIP IC
PS005	1-533-940-21	RINK, CHIP IC
		<TRANSISTOR>
Q201	8-729-026-50	TRANSISTOR 2SA1037AK-T146-QR
Q204	8-729-049-77	TRANSISTOR HN1B01F-GR(T5LSONY)
Q205	8-729-013-22	TRANSISTOR HN1A01FU-TE85R
Q206	8-729-037-63	TRANSISTOR UN9115J-(TX).SO
Q401	8-729-051-63	TRANSISTOR SI4884DY-T1
Q402	8-729-053-79	TRANSISTOR IRF7901D1-TR
Q404	8-729-052-07	TRANSISTOR HAT2064R-EL
Q407	8-729-052-41	TRANSISTOR 2SC4541 (2TL SONY1)
Q408	8-729-054-34	TRANSISTOR FDN304P
Q505	8-729-021-09	TRANSISTOR RN4904(TE85R)
Q506	8-729-047-71	TRANSISTOR FMG12-T-148
Q600	8-729-016-26	TRANSISTOR 2SK1958-T1
Q603	8-729-017-33	TRANSISTOR RN1706-TE85R
		<RESISTOR>
R101	1-211-983-91	RES, CHIP 39 (1608)
R102	1-218-826-91	RES, CHIP 130 (1608)
R103	1-211-983-91	RES, CHIP 39 (1608)
R104	1-218-826-91	RES, CHIP 130 (1608)
R105	1-216-864-91	CONDUCTOR, CHIP (1608)
R106	1-216-809-91	RES, CHIP 100 (1608)
R107	1-216-809-91	RES, CHIP 100 (1608)
R109	1-216-829-91	RES, CHIP 4.7K (1608)
R110	1-211-983-91	RES, CHIP 39 (1608)
R111	1-211-983-91	RES, CHIP 39 (1608)
R112	1-211-989-91	RES, CHIP 68 (1608)
R113	1-211-989-91	RES, CHIP 68 (1608)
R114	1-211-983-91	RES, CHIP 39 (1608)
R115	1-211-983-91	RES, CHIP 39 (1608)
R116	1-211-983-91	RES, CHIP 39 (1608)
R117	1-211-983-91	RES, CHIP 39 (1608)
R118	1-211-973-91	RES, CHIP 15 (1608)
R119	1-211-973-91	RES, CHIP 15 (1608)
R120	1-211-973-91	RES, CHIP 15 (1608)
R121	1-211-973-91	RES, CHIP 15 (1608)
R122	1-216-864-91	CONDUCTOR, CHIP (1608)
R123	1-216-864-91	CONDUCTOR, CHIP (1608)
R124	1-216-864-91	CONDUCTOR, CHIP (1608)
R125	1-216-864-91	CONDUCTOR, CHIP (1608)
R126	1-216-833-91	RES, CHIP 10K (1608)
R127	1-216-829-91	RES, CHIP 4.7K (1608)
R128	1-216-829-91	RES, CHIP 4.7K (1608)
R129	1-216-821-91	RES, CHIP 1.0K (1608)
R130	1-216-817-91	RES, CHIP 470 (1608)
R131	1-216-833-91	RES, CHIP 10K (1608)
R132	1-216-833-91	RES, CHIP 10K (1608)
R133	1-216-833-91	RES, CHIP 10K (1608)
R134	1-216-833-91	RES, CHIP 10K (1608)
R135	1-216-864-91	CONDUCTOR, CHIP (1608)
R136	1-216-864-91	CONDUCTOR, CHIP (1608)
R138	1-216-864-91	CONDUCTOR, CHIP (1608)
R139	1-216-801-91	RES, CHIP 22 (1608)
R145	1-216-821-91	RES, CHIP 1.0K (1608)
R146	1-216-821-91	RES, CHIP 1.0K (1608)
R147	1-216-821-91	RES, CHIP 1.0K (1608)
R185	1-216-829-91	RES, CHIP 4.7K (1608)
R188	1-216-829-91	RES, CHIP 4.7K (1608)
R196	1-216-801-91	RES, CHIP 22 (1608)
R201	1-216-864-91	CONDUCTOR, CHIP (1608)
R202	1-216-833-91	RES, CHIP 10K (1608)
R206	1-211-989-91	RES, CHIP 68 (1608)
R208	1-211-992-91	RES, CHIP 91 (1608)
R209	1-218-828-91	RES, CHIP 160 (1608)
R217	1-218-859-91	RES, CHIP 3.3K (1608)
R218	1-218-847-91	RES, CHIP 1.0K (1608)
R219	1-218-851-91	RES, CHIP 1.5K (1608)
R225	1-216-829-91	RES, CHIP 4.7K (1608)
R226	1-218-965-81	RES, CHIP 10K
R228	1-218-965-81	RES, CHIP 10K
R233	1-216-821-91	RES, CHIP 1.0K (1608)
R236	1-216-809-91	RES, CHIP 100 (1608)
R237	1-216-829-91	RES, CHIP 4.7K (1608)
R244	1-218-831-91	RES, CHIP 220 (1608)
R245	1-218-831-91	RES, CHIP 220 (1608)
R246	1-218-831-91	RES, CHIP 220 (1608)
R247	1-216-801-91	RES, CHIP 22 (1608)
R251	1-216-837-91	RES, CHIP 22K (1608)
R252	1-216-839-91	RES, CHIP 33K (1608)
R253	1-216-833-91	RES, CHIP 10K (1608)
R257	1-216-824-91	RES, CHIP 1.8K (1608)
R258	1-218-883-91	RES, CHIP 33K (1608)
R259	1-216-824-91	RES, CHIP 1.8K (1608)
R261	1-216-829-91	RES, CHIP 4.7K (1608)

Reproduction Prohibited

Ref.	Part No.	Description	
R263	1-216-825-91	RES, CHIP 2.2K	(1608)
R264	1-216-821-91	RES, CHIP 1.0K	(1608)
R265	1-216-821-91	RES, CHIP 1.0K	(1608)
R270	1-218-853-91	RES, CHIP 1.8K	(1608)
R272	1-218-859-91	RES, CHIP 3.3K	(1608)
R273	1-218-851-91	RES, CHIP 1.5K	(1608)
R277	1-218-853-91	RES, CHIP 1.8K	(1608)
R278	1-218-859-91	RES, CHIP 3.3K	(1608)
R279	1-218-851-91	RES, CHIP 1.5K	(1608)
R292	1-216-833-91	RES, CHIP 10K	(1608)
R294	1-216-829-91	RES, CHIP 4.7K	(1608)
R295	1-216-833-91	RES, CHIP 10K	(1608)
R307	1-211-987-91	RES, CHIP 56	(1608)
R308	1-218-864-91	RES, CHIP 5.1K	(1608)
R309	1-211-987-91	RES, CHIP 56	(1608)
R310	1-211-987-91	RES, CHIP 56	(1608)
R311	1-216-829-91	RES, CHIP 4.7K	(1608)
R312	1-211-987-91	RES, CHIP 56	(1608)
R315	1-218-866-91	RES, CHIP 6.2K	(1608)
R316	1-216-797-91	RES, CHIP 10	(1608)
R318	1-216-864-91	CONDUCTOR, CHIP	(1608)
R320	1-219-570-91	RES, CHIP 10M	(1608)
R321	1-216-813-91	RES, CHIP 220	(1608)
R322	1-218-989-81	RES, CHIP 1M	
R324	1-218-965-81	RES, CHIP 10K	
R327	1-216-833-91	RES, CHIP 10K	(1608)
R328	1-216-841-91	RES, CHIP 47K	(1608)
R330	1-216-803-91	RES, CHIP 33	(1608)
R331	1-216-864-91	CONDUCTOR, CHIP	(1608)
R332	1-216-817-91	RES, CHIP 470	(1608)
R333	1-216-817-91	RES, CHIP 470	(1608)
R334	1-216-829-91	RES, CHIP 4.7K	(1608)
R335	1-216-829-91	RES, CHIP 4.7K	(1608)
R336	1-216-821-91	RES, CHIP 1.0K	(1608)
R347	1-211-986-91	RES, CHIP 51	(1608)
R349	1-216-821-91	RES, CHIP 1.0K	(1608)
R350	1-216-807-91	RES, CHIP 68	(1608)
R351	1-216-805-91	RES, CHIP 47	(1608)
R352	1-216-797-91	RES, CHIP 10	(1608)
R355	1-218-933-81	RES, CHIP 22	
R356	1-216-801-91	RES, CHIP 22	(1608)
R357	1-218-933-81	RES, CHIP 22	
R358	1-218-933-81	RES, CHIP 22	
R359	1-216-801-91	RES, CHIP 22	(1608)
R360	1-216-805-91	RES, CHIP 47	(1608)
R361	1-216-805-91	RES, CHIP 47	(1608)
R362	1-218-937-81	RES, CHIP 47	
R363	1-216-864-91	CONDUCTOR, CHIP	(1608)
R364	1-216-805-91	RES, CHIP 47	(1608)
R365	1-216-805-91	RES, CHIP 47	(1608)
R366	1-218-937-81	RES, CHIP 47	
R367	1-216-805-91	RES, CHIP 47	(1608)
R368	1-216-805-91	RES, CHIP 47	(1608)
R394	1-216-833-91	RES, CHIP 10K	(1608)
R395	1-216-825-91	RES, CHIP 2.2K	(1608)
R401	1-216-857-91	RES, CHIP 1.0M	(1608)
R402	1-216-845-91	RES, CHIP 100K	(1608)
R406	1-216-811-91	RES, CHIP 150	(1608)
R409	1-218-835-91	RES, CHIP 330	(1608)
R410	1-218-883-91	RES, CHIP 33K	(1608)
R411	1-218-883-91	RES, CHIP 33K	(1608)
R412	1-218-883-91	RES, CHIP 33K	(1608)
R413	1-218-891-91	RES, CHIP 68K	(1608)
R414	1-218-861-91	RES, CHIP 3.9K	(1608)
R417	1-216-813-91	RES, CHIP 220	(1608)

Ref.	Part No.	Description	
R418	1-216-837-91	RES, CHIP 22K	(1608)
R421	1-216-790-91	RES, CHIP 2.7	(1608)
R422	1-216-797-91	RES, CHIP 10	(1608)
R423	1-216-790-91	RES, CHIP 2.7	(1608)
R424	1-216-797-91	RES, CHIP 10	(1608)
R425	1-218-985-81	RES, CHIP 470K	
R426	1-218-877-91	RES, CHIP 18K	(1608) **for GH007-21**
R426	1-218-883-91	RES, CHIP 33K	(1608) **for GH007-11**
R427	1-218-875-91	RES, CHIP 15K	(1608) **for GH007-21**
R427	1-218-879-91	RES, CHIP 22K	(1608) **for GH007-11**
R428	1-216-309-91	RES, CHIP 5.6	(2012)
R430	1-216-813-91	RES, CHIP 220	(1608)
R433	1-216-826-91	RES, CHIP 2.7K	(1608)
R438	1-218-850-91	RES, CHIP 1.3K	(1608)
R439	1-218-857-91	RES, CHIP 2.7K	(1608)
R448	1-216-829-91	RES, CHIP 4.7K	(1608)
R451	1-216-813-91	RES, CHIP 220	(1608)
R470	1-216-837-91	RES, CHIP 22K	(1608)
R471	1-218-985-81	RES, CHIP 470K	
R472	1-218-871-91	RES, CHIP 10K	(1608)
R473	1-218-863-91	RES, CHIP 4.7K	(1608)
R474	1-216-827-91	RES, CHIP 3.3K	(1608)
R475	1-216-822-91	RES, CHIP 1.2K	(1608)
R476	1-216-813-91	RES, CHIP 220	(1608)
R477	1-216-816-91	RES, CHIP 390	(1608)
R478	1-216-813-91	RES, CHIP 220	(1608)
R479	1-216-816-91	RES, CHIP 390	(1608)
R497	1-216-864-91	CONDUCTOR, CHIP	(1608)
R503	1-216-803-91	RES, CHIP 33	(1608)
R504	1-216-803-91	RES, CHIP 33	(1608)
R505	1-216-803-91	RES, CHIP 33	(1608)
R506	1-216-809-91	RES, CHIP 100	(1608)
R507	1-218-937-81	RES, CHIP 47	
R509	1-216-821-91	RES, CHIP 1.0K	(1608)
R511	1-216-806-91	RES, CHIP 56	(1608)
R513	1-218-937-81	RES, CHIP 47	
R514	1-216-806-91	RES, CHIP 56	(1608)
R515	1-216-806-91	RES, CHIP 56	(1608)
R516	1-218-941-81	RES, CHIP 100	
R517	1-218-941-81	RES, CHIP 100	
R520	1-216-806-91	RES, CHIP 56	(1608)
R521	1-216-806-91	RES, CHIP 56	(1608)
R522	1-216-833-91	RES, CHIP 10K	(1608)
R527	1-216-821-91	RES, CHIP 1.0K (1608) **for SCPH-30002 GH007-21**	
R531	1-216-809-91	RES, CHIP 100	(1608)
R574	1-216-812-91	RES, CHIP 180	(1608)
R601	1-216-864-91	CONDUCTOR, CHIP	(1608)
R604	1-216-845-91	RES, CHIP 100K	(1608)
R606	1-216-833-91	RES, CHIP 10K	(1608)
R607	1-218-965-81	RES, CHIP 10K	
R613	1-216-833-91	RES, CHIP 10K	(1608)
R614	1-218-965-81	RES, CHIP 10K	
R615	1-216-864-91	CONDUCTOR, CHIP	(1608)
R616	1-216-864-91	CONDUCTOR, CHIP	(1608)
R619	1-216-833-91	RES, CHIP 10K	(1608)
R620	1-216-833-91	RES, CHIP 10K	(1608)
R623	1-216-837-91	RES, CHIP 22K	(1608)
R624	1-216-850-91	RES, CHIP 270K	(1608)
R625	1-216-839-91	RES, CHIP 33K	(1608)
R626	1-218-965-81	RES, CHIP 10K	
R627	1-216-835-91	RES, CHIP 15K	(1608)
R630	1-216-837-91	RES, CHIP 22K	(1608)
R631	1-216-821-91	RES, CHIP 1.0K	(1608)
R632	1-216-821-91	RES, CHIP 1.0K	(1608)
R633	1-216-821-91	RES, CHIP 1.0K	(1608)

Ref.	Part No.	Description	
R634	1-216-821-91	RES, CHIP 1.0K	(1608)
R636	1-216-864-91	CONDUCTOR, CHIP	(1608)
R640	1-216-837-91	RES, CHIP 22K	(1608)
R642	1-218-965-81	RES, CHIP 10K	
R643	1-216-850-91	RES, CHIP 270K	(1608)
R644	1-216-837-91	RES, CHIP 22K	(1608)
R649	1-216-833-91	RES, CHIP 10K	(1608)
R650	1-218-965-81	RES, CHIP 10K	
R651	1-216-835-91	RES, CHIP 15K	(1608)
R653	1-216-845-91	RES, CHIP 100K	(1608)
R654	1-218-977-81	RES, CHIP 100K	
R657	1-218-971-81	RES, CHIP 33K	
R658	1-218-965-81	RES, CHIP 10K	
R660	1-216-833-91	RES, CHIP 10K	(1608)
R661	1-216-833-91	RES, CHIP 10K	(1608)
R662	1-216-864-91	CONDUCTOR, CHIP	(1608)
R667	1-216-861-91	RES, CHIP 2.2M	(1608)
R668	1-218-985-81	RES, CHIP 470K	
R669	1-218-977-81	RES, CHIP 100K	
R670	1-218-965-81	RES, CHIP 10K	
R671	1-218-959-81	RES, CHIP 3.3K	
R672	1-218-888-91	RES, CHIP 51K	(1608)
R673	1-218-959-81	RES, CHIP 3.3K	
R674	1-218-977-81	RES, CHIP 100K	
R675	1-218-971-81	RES, CHIP 33K	
R678	1-216-829-91	RES, CHIP 4.7K	(1608)
R689	1-218-977-81	RES, CHIP 100K	
R694	1-216-835-91	RES, CHIP 15K	(1608)
R696	1-216-846-91	RES, CHIP 120K	(1608)
R698	1-216-835-91	RES, CHIP 15K	(1608)
R699	1-216-833-91	RES, CHIP 10K	(1608)
R901	1-216-805-91	RES, CHIP 47	(1608)
R902	1-216-805-91	RES, CHIP 47	(1608)
R974	1-216-801-91	RES, CHIP 22	(1608)
R975	1-216-801-91	RES, CHIP 22	(1608)
R984	1-216-864-91	CONDUCTOR, CHIP	(1608)
RB101	1-234-496-21	ARRAY, RESISTOR 39	
RB102	1-234-496-21	ARRAY, RESISTOR 39	
RB103	1-234-496-21	ARRAY, RESISTOR 39	
RB104	1-234-496-21	ARRAY, RESISTOR 39	
RB105	1-234-496-21	ARRAY, RESISTOR 39	
RB106	1-234-496-21	ARRAY, RESISTOR 39	
RB107	1-233-575-21	RES, CHIP NETWORK 22	
RB108	1-233-575-21	RES, CHIP NETWORK 22	
RB109	1-233-575-21	RES, CHIP NETWORK 22	
RB110	1-233-575-21	RES, CHIP NETWORK 22	
RB111	1-233-575-21	RES, CHIP NETWORK 22	
RB112	1-233-575-21	RES, CHIP NETWORK 22	
RB113	1-233-575-21	RES, CHIP NETWORK 22	
RB114	1-233-575-21	RES, CHIP NETWORK 22	
RB115	1-233-575-21	RES, CHIP NETWORK 22	
RB116	1-233-575-21	RES, CHIP NETWORK 22	
RB117	1-233-575-21	RES, CHIP NETWORK 22	
RB118	1-233-575-21	RES, CHIP NETWORK 22	
RB119	1-233-575-21	RES, CHIP NETWORK 22	
RB120	1-233-575-21	RES, CHIP NETWORK 22	
RB121	1-233-575-21	RES, CHIP NETWORK 22	
RB122	1-233-575-21	RES, CHIP NETWORK 22	
RB123	1-233-575-21	RES, CHIP NETWORK 22	
RB124	1-233-575-21	RES, CHIP NETWORK 22	
RB125	1-233-575-21	RES, CHIP NETWORK 22	
RB126	1-233-575-21	RES, CHIP NETWORK 22	
RB130	1-233-423-21	RES, CHIP NETWORK 47 (3216)	
RB131	1-233-423-21	RES, CHIP NETWORK 47 (3216)	
RB132	1-233-423-21	RES, CHIP NETWORK 47 (3216)	
RB133	1-233-423-21	RES, CHIP NETWORK 47 (3216)	

Ref.	Part No.	Description	
RB134	1-233-423-21	RES, CHIP NETWORK 47 (3216)	
RB135	1-233-423-21	RES, CHIP NETWORK 47 (3216)	
RB136	1-233-423-21	RES, CHIP NETWORK 47 (3216)	
RB137	1-233-423-21	RES, CHIP NETWORK 47 (3216)	
RB139	1-233-414-21	RES, CHIP NETWORK 4.7K (3216)	
RB241	1-233-414-21	RES, CHIP NETWORK 4.7K (3216)	
RB294	1-233-414-21	RES, CHIP NETWORK 4.7K (3216)	
RB295	1-233-412-21	RES, CHIP NETWORK 1.0K (3216)	
RB296	1-234-598-21	RES, CHIP NETWORK 75X4 (3216)	
RB297	1-234-599-21	RES, CHIP NETWORK 180X4 (3216)	
RB298	1-234-598-21	RES, CHIP NETWORK 75X4 (3216)	
RB303	1-233-412-21	RES, CHIP NETWORK 1.0K (3216)	
RB305	1-233-575-21	RES, CHIP NETWORK 22	
RB310	1-233-414-21	RES, CHIP NETWORK 4.7K (3216)	
RB311	1-233-679-91	RES, NETWORK (1608) 470	
RB312	1-233-786-91	RES, NETWORK 220	(1608)
RB314	1-233-681-91	RES, NETWORK (1608) 4.7K	
RB317	1-233-423-21	RES, CHIP NETWORK 47 (3216)	
RB318	1-233-423-21	RES, CHIP NETWORK 47 (3216)	
RB319	1-233-423-21	RES, CHIP NETWORK 47 (3216)	
RB320	1-233-423-21	RES, CHIP NETWORK 47 (3216)	
RB321	1-233-423-21	RES, CHIP NETWORK 47 (3216)	
RB322	1-233-412-21	RES, CHIP NETWORK 1.0K (3216)	
RB323	1-233-412-21	RES, CHIP NETWORK 1.0K (3216)	
RB324	1-233-412-21	RES, CHIP NETWORK 1.0K (3216)	
RB325	1-233-412-21	RES, CHIP NETWORK 1.0K (3216)	
RB326	1-233-412-21	RES, CHIP NETWORK 1.0K (3216)	
RB327	1-233-415-21	RES, CHIP NETWORK 10K (3216)	
RB328	1-233-414-21	RES, CHIP NETWORK 4.7K (3216)	
RB329	1-233-783-91	RES, NETWORK 22	(1608)
RB402	1-233-803-91	RES, NETWORK 1.5K	(1608)
RB511	1-233-423-21	RES, CHIP NETWORK 47 (3216)	
RB512	1-234-610-21	RES, CHIP NETWORK 270K (3216)	
RB514	1-233-576-21	RES, CHIP NETWORK 100	
RB515	1-234-611-21	RES, CHIP NETWORK 560 (3216)	
RB516	1-233-415-21	RES, CHIP NETWORK 10K (3216)	
RB517	1-233-575-21	RES, CHIP NETWORK 22	
RB518	1-233-575-21	RES, CHIP NETWORK 22	
RB519	1-233-575-21	RES, CHIP NETWORK 22	
RB520	1-233-575-21	RES, CHIP NETWORK 22	
RB521	1-233-575-21	RES, CHIP NETWORK 22	
RB522	1-233-575-21	RES, CHIP NETWORK 22	
RB523	1-233-575-21	RES, CHIP NETWORK 22	
RB524	1-233-575-21	RES, CHIP NETWORK 22	
RB525	1-233-575-21	RES, CHIP NETWORK 22	
RB526	1-233-575-21	RES, CHIP NETWORK 22	
RB527	1-233-575-21	RES, CHIP NETWORK 22	
RB528	1-233-575-21	RES, CHIP NETWORK 22	
RB529	1-233-575-21	RES, CHIP NETWORK 22	
RB530	1-233-575-21	RES, CHIP NETWORK 22	
RB531	1-233-575-21	RES, CHIP NETWORK 22	
RB532	1-233-575-21	RES, CHIP NETWORK 22	
RB602	1-233-415-21	RES, CHIP NETWORK 10K (3216)	
RB603	1-233-415-21	RES, CHIP NETWORK 10K (3216)	
RB606	1-233-412-21	RES, CHIP NETWORK 1.0K (3216)	
RB607	1-233-415-21	RES, CHIP NETWORK 10K (3216)	
RB609	1-233-423-21	RES, CHIP NETWORK 47 (3216)	
RB611	1-233-415-21	RES, CHIP NETWORK 10K (3216)	

<CRYSTAL>

X101	1-781-640-21	VIBRATOR, CRYSTAL	
X201	1-781-640-21	VIBRATOR, CRYSTAL	
X202	1-781-857-21	OSCILLATOR, CRYSTAL	
X301	1-781-856-21	VIBRATOR, CRYSTAL	
X302	1-781-768-21	VIBRATOR, CRYSTAL	

****

Reproduction Prohibited

Ref.	Part No.	Description	
	A-6712-832-A	**MOUNTED CIRCUIT BOARD, GD-013**	**for GD013-11**
	A-6712-863-A	**MOUNTED CIRCUIT BOARD, GD-013**	**for GD013-21**
		**********	
		PLACE CODE #25GD	
		<BATTERY>	
BT401	1-756-076-21	HOLDER, LITHIUM BATTERY	
		<CAPACITOR>	
C119	1-162-927-91	CAP, CERAMIC 100PF CH (1608)	
C120	1-162-927-91	CAP, CERAMIC 100PF CH (1608)	
C121	1-162-927-91	CAP, CERAMIC 100PF CH (1608)	
C122	1-162-927-91	CAP, CERAMIC 100PF CH (1608)	
C123	1-162-927-91	CAP, CERAMIC 100PF CH (1608)	
C124	1-162-927-91	CAP, CERAMIC 100PF CH (1608)	
C401	1-107-826-91	CAP, CHIP CERAMIC 100000PF B	
C402	1-164-505-91	CAP, CHIP CERAMIC 2.2MF F (2012)	
C403	1-162-964-91	CAP,CHIP CERAMIC 1000PF B (1608)	
C405	1-107-826-91	CAP, CHIP CERAMIC 100000PF B	
C407	1-107-826-91	CAP, CHIP CERAMIC 100000PF B	
C408	1-125-837-91	CAP, CHIP CERAMIC 1MF B (1608)	
C425	1-128-995-21	CAP, ELECT 100MF	
C426	1-107-826-91	CAP, CHIP CERAMIC 100000PF B	
C434	1-162-964-91	CAP,CHIP CERAMIC 1000PF B (1608)	
C445	1-117-720-91	CAP, CERAMIC 4.7MF F (2012)	
C449	1-162-964-91	CAP,CHIP CERAMIC 1000PF B (1608)	
C452	1-164-156-91	CAP, CHIP CERAMIC 0.1MF F (1608)	
C453	1-164-156-91	CAP, CHIP CERAMIC 0.1MF F (1608)	
C454	1-124-779-21	CAP, ELECT 10MF	
C455	1-124-779-21	CAP, ELECT 10MF	
C456	1-124-779-21	CAP, ELECT 10MF	
C458	1-135-347-21	CAP, SOLID ELECT 82MF	
C459	1-135-347-21	CAP, SOLID ELECT 82MF	
C460	1-164-174-91	CAP,CERAMIC 8200PF B (1608)	
C461	1-164-174-91	CAP,CERAMIC 8200PF B (1608)	
C462	1-135-347-21	CAP, SOLID ELECT 82MF	
C465	1-107-826-91	CAP, CHIP CERAMIC 100000PF B	
C467	1-126-209-21	CAP, ELECT 100MF	
C469	1-162-977-91	CAP, CERAMIC 1800PF B (1608)	
C470	1-107-826-91	CAP, CHIP CERAMIC 100000PF B	
C471	1-164-379-91	CAP, CERAMIC 43PF CH (1608)	
C472	1-107-826-91	CAP, CHIP CERAMIC 100000PF B	
C473	1-162-970-91	CAP, CERAMIC 10000PF B (1608)	
C474	1-107-826-91	CAP, CHIP CERAMIC 100000PF B	
C475	1-164-730-91	CAP,CERAMIC 1200PF B (1608)	
C476	1-115-339-91	CAP, CERAMIC 0.1MF B (2012)	
C478	1-124-779-21	CAP, ELECT 10MF for GD013-11	
C479	1-125-837-91	CAP, CHIP CERAMIC 1MF B (1608)	
C480	1-115-339-91	CAP, CERAMIC 0.1MF B (2012)	
C481	1-135-593-21	CAP, ELECT 150MF	
C482	1-107-826-91	CAP, CHIP CERAMIC 100000PF B	
C483	1-107-826-91	CAP, CHIP CERAMIC 100000PF B	
C484	1-135-593-21	CAP, ELECT 150MF	
C485	1-107-826-91	CAP, CHIP CERAMIC 100000PF B	
C486	1-131-999-21	CAP, SOLID ELECT 150MF	
C487	1-131-999-21	CAP, SOLID ELECT 150MF	
C488	1-115-566-91	CAP, CERAMIC 4.7MF B	
C489	1-131-999-21	CAP, SOLID ELECT 150MF	
C491	1-126-209-21	CAP, ELECT 100MF	**for GD013-11**
C492	1-107-826-91	CAP, CHIP CERAMIC 100000PF B	
C493	1-107-826-91	CAP, CHIP CERAMIC 100000PF B	
C494	1-107-725-91	CAP, CERAMIC 100000PF B (2012)	
C495	1-125-837-91	CAP, CHIP CERAMIC 1MF B (1608)	
C496	1-107-682-91	CAP, CERAMIC 1000000PF B (3216)	
C497	1-162-964-91	CAP,CHIP CERAMIC 1000PF B (1608) for GD013-11	
C498	1-124-779-21	CAP, ELECT 10MF	
C499	1-164-505-91	CAP, CHIP CERAMIC 2.2MF F (2012)	
C500	1-137-765-21	CAP, ELECT 47MF	
C501	1-126-205-21	CAP, ELECT 47MF	
C502	1-162-964-91	CAP,CHIP CERAMIC 1000PF B (1608)	
C503	1-137-766-21	CAP, ELECT 68MF	
C504	1-163-009-91	CAP,CHIP CERAMIC 1000PF B (2012)	
C505	1-137-765-21	CAP, ELECT 47MF	
C506	1-137-765-21	CAP, ELECT 47MF	
C507	1-162-964-91	CAP,CHIP CERAMIC 1000PF B (1608)	
C508	1-137-765-21	CAP, ELECT 47MF	
C509	1-137-766-21	CAP, ELECT 68MF	
C510	1-137-765-21	CAP, ELECT 47MF	
C511	1-137-765-21	CAP, ELECT 47MF	
		<CONNECTOR>	
CN401	1-815-305-11	CONNECTOR (PLUG) 4P	
CN404	1-815-231-21	CONNECTOR, FFC/FPC (ZIF) 40P	
CN405	1-815-303-11	CONNECTOR, BOARD TO BOARD 34P	
CN406	1-779-345-11	CONNECTOR, FFC/FPC 7P	
		<DIODE>	
D401	8-719-016-75	DIODE 1SS352-TPH3	
D404	8-719-033-15	DIODE HN2D02FU-TE85R	
D407	8-719-074-34	DIODE RB495D-T146	
D408	8-719-074-34	DIODE RB495D-T146	
		<FUSE>	
⚠ F001	1-576-434-21	FUSE, CHIP	
⚠ F002	1-576-434-21	FUSE, CHIP	
		<FERRITE BEAD>	
FB003	1-469-667-21	FERRITE, EMI (SMD)	
FB004	1-469-667-21	FERRITE, EMI (SMD)	
FB005	1-469-667-21	FERRITE, EMI (SMD)	
FB006	1-469-667-21	FERRITE, EMI (SMD)	
FB007	1-469-667-21	FERRITE, EMI (SMD)	
FB008	1-469-667-21	FERRITE, EMI (SMD)	
		<IC>	
IC401	8-759-661-25	IC S-80769SN-J0-T1	
IC402	8-749-019-21	IC TMP87C807U-2A69	
IC403	8-759-688-08	IC MM1537DFBE	
IC405	8-759-560-17	IC RS5C348A-E2	
IC406	8-759-667-20	IC BR9080F-E2	
IC407	8-759-712-66	IC PQ018PZ01ZP	
IC409	8-759-689-89	IC SN104809DBTR	
IC411	8-759-688-06	IC MM3031JULE	
IC412	8-749-018-41	IC SI-3025LSA-TL	**for GD013-11**
IC413	8-759-665-28	IC SI-3034LSA-TL	
IC414	8-759-069-41	IC TA7808F(TE16L)	
		<INDUCTOR>	
L405	1-416-948-21	COIL, CHOKE 10UH	
L406	1-419-491-21	COIL, CHOKE 10UH	
L407	1-419-491-21	COIL, CHOKE 10UH	
L408	1-419-898-21	COIL, CHOKE 5.6UH	
L409	1-469-966-21	INDUCTOR, CHIP 1UH (2518)	
		<LINK>	
⚠ PS001	1-533-674-21	RINK, CHIP IC	
⚠ PS002	1-533-940-21	RINK, CHIP IC	
⚠ PS003	1-533-940-21	RINK, CHIP IC	**for GD013-11**
⚠ PS004	1-533-915-41	RINK, CHIP IC	
⚠ PS005	1-533-282-21	LINK, IC	
⚠ PS006	1-533-940-21	RINK, CHIP IC	
⚠ PS007	1-533-915-41	RINK, CHIP IC	
⚠ PS008	1-533-282-21	LINK, IC	
⚠ PS009	1-533-674-21	RINK, CHIP IC	
		<TRANSISTOR>	
Q405	8-729-427-47	TRANSISTOR XP4213-TXE	
Q406	8-729-053-79	TRANSISTOR IRF7901D1-TR	
Q407	8-729-046-04	TRANSISTOR FDS6690A	
Q408	8-729-051-61	TRANSISTOR IRF7807D1-TR	
Q409	8-729-427-47	TRANSISTOR XP4213-TXE	
Q410	8-729-013-97	TRANSISTOR RN1304-TE85L	
Q411	8-729-043-74	TRANSISTOR SI4435DY-T1-REVA	
Q412	8-729-043-74	TRANSISTOR SI4435DY-T1-REVA	
Q414	8-729-043-74	TRANSISTOR SI4435DY-T1-REVA	
Q415	8-729-013-97	TRANSISTOR RN1304-TE85L	
Q416	8-729-028-91	TRANSISTOR DTA144EUA-T106	
		<RESISTOR>	
R429	1-216-833-91	RES, CHIP 10K (1608)	
R431	1-216-813-91	RES, CHIP 220 (1608)	
R432	1-216-826-91	RES, CHIP 2.7K (1608)	
R434	1-216-810-91	RES, CHIP 120 (1608)	
R435	1-216-810-91	RES, CHIP 120 (1608)	
R440	1-218-859-91	RES, CHIP 3.3K (1608)	
R441	1-218-879-91	RES, CHIP 22K (1608)	
R442	1-218-869-91	RES, CHIP 8.2K (1608)	
R443	1-218-865-91	RES, CHIP 5.6K (1608)	
R444	1-218-881-91	RES, CHIP 27K (1608)	
R445	1-218-849-91	RES, CHIP 1.2K (1608)	
R446	1-216-817-91	RES, CHIP 470 (1608)	
R447	1-216-817-91	RES, CHIP 470 (1608)	
R449	1-216-829-91	RES, CHIP 4.7K (1608)	**for GD013-11**
R450	1-216-813-91	RES, CHIP 220 (1608)	**for GD013-11**
R452	1-216-797-91	RES, CHIP 10 (1608)	
R453	1-216-797-91	RES, CHIP 10 (1608)	
R454	1-216-797-91	RES, CHIP 10 (1608)	
R457	1-218-883-91	RES, CHIP 33K (1608)	
R458	1-216-797-91	RES, CHIP 10 (1608)	
R459	1-216-833-91	RES, CHIP 10K (1608)	
R460	1-218-874-91	RES, CHIP 13K (1608)	
R461	1-216-309-91	RES, CHIP 5.6 (2012)	
R462	1-216-864-91	CONDUCTOR, CHIP (1608)	
R463	1-216-857-91	RES, CHIP 1.0M (1608)	
R465	1-216-845-91	RES, CHIP 100K (1608)	
R466	1-216-833-91	RES, CHIP 10K (1608)	
R467	1-216-833-91	RES, CHIP 10K (1608)	**for GD013-11**
R468	1-216-833-91	RES, CHIP 10K (1608)	**for GD013-21**
R469	1-216-833-91	RES, CHIP 10K (1608)	
R470	1-216-827-91	RES, CHIP 3.3K (1608)	
R471	1-216-822-91	RES, CHIP 1.2K (1608)	
R472	1-216-837-91	RES, CHIP 22K (1608)	
R473	1-216-837-91	RES, CHIP 22K (1608)	
R474	1-216-813-91	RES, CHIP 220 (1608)	
R475	1-216-816-91	RES, CHIP 390 (1608)	
R476	1-216-816-91	RES, CHIP 390 (1608)	
R477	1-216-813-91	RES, CHIP 220 (1608)	
R478	1-216-837-91	RES, CHIP 22K (1608)	
R479	1-216-829-91	RES, CHIP 4.7K (1608)	
R480	1-216-832-91	RES, CHIP 8.2K (1608)	
RB403	1-233-789-91	RES, NETWORK 10K (1608)	
RB405	1-233-803-91	RES, NETWORK 1.5K (1608)	
RB406	1-233-792-91	RES, NETWORK 100K (1608)	
RB407	1-233-795-91	RES, NETWORK 1.0M (1608)	
RB408	1-233-415-21	RES, CHIP NETWORK 10K ((3216))	
RB409	1-233-415-21	RES, CHIP NETWORK 10K ((3216))	
RB410	1-233-415-21	RES, CHIP NETWORK 10K ((3216))	
		<THERMISTOR>	
⚠ TH401	1-533-817-21	THERMISTOR	
⚠ TH402	1-533-817-21	THERMISTOR	
⚠ TH403	1-533-817-21	THERMISTOR	
		<CRYSTAL>	
X401	1-760-496-22	VIBRATOR, LITHIUM NIOBATE	
X402	1-781-266-41	VIBRATOR, CRYSTAL	
		**********	
	A-6712-834-A	**MOUNTED CIRCUIT BOARD, GI-006**	
		**********	
		PLACE CODE #25GI	
		<CONNECTOR>	
CN903	1-815-240-21	CONNECTOR BOARD TO BOARD 110P	
CN904	1-815-191-21	CONNECTOR BOARD TO BOARD 110P	
		**********	
	A-6712-833-A	**MOUNTED CIRCUIT BOARD, GM-043**	
		**********	
		PLACE CODE #25GM	
		<CAPACITOR>	
C100	1-115-467-91	CAP, CHIP CERAMIC0.22MF B (1608)	
C101	1-115-467-91	CAP, CHIP CERAMIC0.22MF B (1608)	
C102	1-104-913-91	CAP, CHIP TANTALUM ELECT 10MF	
C103	1-135-900-21	CAP, TANTALUM ELECT 22MF	
C104	1-164-670-91	CAP, CERAMIC 1200PF SL (1608)	
C105	1-104-913-91	CAP, CHIP TANTALUM ELECT 10MF	
C106	1-135-900-21	CAP, TANTALUM ELECT 22MF	
C107	1-164-670-91	CAP, CERAMIC 1200PF SL (1608)	
C108	1-107-826-91	CAP, CHIP CERAMIC 100000PF B	
C109	1-164-173-91	CAP,CERAMIC 3900PF B (1608)	
C110	1-164-173-91	CAP,CERAMIC 3900PF B (1608)	
C111	1-115-467-91	CAP, CHIP CERAMIC0.22MF B (1608)	
C127	1-162-927-91	CAP, CERAMIC 100PF CH (1608)	
C128	1-162-927-91	CAP, CERAMIC 100PF CH (1608)	
C129	1-162-927-91	CAP, CERAMIC 100PF CH (1608)	
C130	1-162-927-91	CAP, CERAMIC 100PF CH (1608)	
C140	1-107-826-91	CAP, CHIP CERAMIC 100000PF B	
C141	1-107-826-91	CAP, CHIP CERAMIC 100000PF B	
C149	1-162-964-91	CAP,CHIP CERAMIC 1000PF B (1608)	
C150	1-162-927-91	CAP, CERAMIC 100PF CH (1608)	
C151	1-162-927-91	CAP, CERAMIC 100PF CH (1608)	
C152	1-162-927-91	CAP, CERAMIC 100PF CH (1608)	
C153	1-162-927-91	CAP, CERAMIC 100PF CH (1608)	
C154	1-162-966-91	CAP, CERAMIC 2200PF B (1608)	
C155	1-162-966-91	CAP, CERAMIC 2200PF B (1608)	
C156	1-162-966-91	CAP, CERAMIC 2200PF B (1608)	
C157	1-162-966-91	CAP, CERAMIC 2200PF B (1608)	
C158	1-104-913-91	CAP, CHIP TANTALUM ELECT 10MF	
C159	1-107-826-91	CAP, CHIP CERAMIC 100000PF B	
C160	1-104-913-91	CAP, CHIP TANTALUM ELECT 10MF	
C161	1-107-826-91	CAP, CHIP CERAMIC 100000PF B	
C163	1-107-826-91	CAP, CHIP CERAMIC 100000PF B	
C165	1-107-826-91	CAP, CHIP CERAMIC 100000PF B	
C166	1-104-851-91	CAP, CHIP TANTALUM ELECT 10MF	
C167	1-107-826-91	CAP, CHIP CERAMIC 100000PF B	
C169	1-107-826-91	CAP, CHIP CERAMIC 100000PF B	
C171	1-107-826-91	CAP, CHIP CERAMIC 100000PF B	
C172	1-104-913-91	CAP, CHIP TANTALUM ELECT 10MF	
C173	1-107-826-91	CAP, CHIP CERAMIC 100000PF B	

Reproduction Prohibited

Ref.	Part No.	Description	
C174	1-162-975-91	CAP, CERAMIC 24PF CH	(1608)
C175	1-164-677-91	CAP,CERAMIC 33000PF B	(1608)
C176	1-107-826-91	CAP, CHIP CERAMIC 100000PF B	
C177	1-107-826-91	CAP, CHIP CERAMIC 100000PF B	
C178	1-107-826-91	CAP, CHIP CERAMIC 100000PF B	
C179	1-107-826-91	CAP, CHIP CERAMIC 100000PF B	
C180	1-107-826-91	CAP, CHIP CERAMIC 100000PF B	
C181	1-107-826-91	CAP, CHIP CERAMIC 100000PF B	
C183	1-107-826-91	CAP, CHIP CERAMIC 100000PF B	
C184	1-164-677-91	CAP,CERAMIC 33000PF B	(1608)
C185	1-107-826-91	CAP, CHIP CERAMIC 100000PF B	
C186	1-164-392-91	CAP, CERAMIC 390PF CH	(1608)
C187	1-115-467-91	CAP, CHIP CERAMIC0.22MF B	(1608)
C188	1-164-677-91	CAP,CERAMIC 33000PF B	(1608)
C189	1-164-739-91	CAP, CERAMIC 560PF CH	(1608)
C190	1-164-739-91	CAP, CERAMIC 560PF CH	(1608)
C196	1-162-964-91	CAP,CHIP CERAMIC 1000PF B	(1608)
C197	1-115-467-91	CAP, CHIP CERAMIC0.22MF B	(1608)
C198	1-125-837-91	CAP, CHIP CERAMIC 1MF B	(1608)
C199	1-125-837-91	CAP, CHIP CERAMIC 1MF B	(1608)
C402	1-164-505-91	CAP, CHIP CERAMIC 2.2MF F	(2012)
C403	1-113-642-91	CAP, CHIP TANTALUM ELECT 47MF	
C617	1-164-156-91	CAP, CHIP CERAMIC 0.1MF F	(1608)
C618	1-164-245-91	CAP,CERAMIC 15000PF B	(1608)
C620	1-164-677-91	CAP,CERAMIC 33000PF B	(1608)
C622	1-164-156-91	CAP, CHIP CERAMIC 0.1MF F	(1608)
C700	1-162-970-91	CAP, CERAMIC 10000PF B	(1608)
C701	1-162-970-91	CAP, CERAMIC 10000PF B	(1608)
C702	1-162-970-91	CAP, CERAMIC 10000PF B	(1608)
C703	1-164-156-91	CAP, CHIP CERAMIC 0.1MF F	(1608)
C704	1-164-156-91	CAP, CHIP CERAMIC 0.1MF F	(1608)
C705	1-164-156-91	CAP, CHIP CERAMIC 0.1MF F	(1608)
C706	1-127-692-91	CAP, CHIP CERAMIC 10MF B	(3225)
C707	1-163-038-91	CAP, CERAMIC 100000PF F	(2012)
C710	1-164-156-91	CAP, CHIP CERAMIC 0.1MF F	(1608)
C713	1-164-156-91	CAP, CHIP CERAMIC 0.1MF F	(1608)
C717	1-163-009-91	CAP,CHIP CERAMIC 1000PF B	(2012)
C718	1-107-823-91	CAP, CERAMIC 470000PF B	(2012)
C719	1-163-038-91	CAP, CERAMIC 100000PF F	(2012)
C720	1-127-692-91	CAP, CHIP CERAMIC 10MF B	(3225)
C722	1-163-009-91	CAP,CHIP CERAMIC 1000PF B	(2012)
C727	1-162-964-91	CAP,CHIP CERAMIC 1000PF B	(1608)
C728	1-164-230-91	CAP,CERAMIC 220PF CH	(1608)
C729	1-164-230-91	CAP,CERAMIC 220PF CH	(1608)
C730	1-164-230-91	CAP,CERAMIC 220PF CH	(1608)
C731	1-164-230-91	CAP,CERAMIC 220PF CH	(1608)
		<CONNECTOR>	
CN100	1-794-237-21	CONNECTOR, FFC/FPC 30P	
CN101	1-770-619-41	PIN, CONNECTOR 2P	
CN102	1-770-619-21	PIN, CONNECTOR 2P	
CN103	1-770-619-81	PIN, CONNECTOR 2P	
CN104	1-815-089-21	CONNECTOR, FPC LIF(NON-ZIF)13P	
CN105	1-779-206-21	CONNECTOR, FFC(LIF(NON-ZIF))4P	
CN109	1-793-823-21	CONNECTOR, FFC/FPC (ZIF) 54P	
		<DIODE>	
D100	8-719-065-68	DIODE MAZF04700LS0	
D101	8-719-065-68	DIODE MAZF04700LS0	
		<FERRITE BEAD>	
FB001	1-469-562-21	FERRITE, EMI (SMD)	
FB002	1-469-562-21	FERRITE, EMI (SMD)	

Ref.	Part No.	Description	
		<IC>	
IC101	8-759-685-15	IC SP3727ACA0PMR	
IC401	8-759-391-69	IC MC78M05CDTRK	
IC602	8-759-693-13	IC NJM12904V(TE2)	
IC607	8-759-712-63	IC MC74VHC1G66DFT1	
IC700	8-759-588-60	IC BA6664FM-E2	
IC701	8-759-370-11	IC NJM2100V-TE2	
IC703	8-759-658-87	IC BA5810FP-E2	
		<INDUCTOR>	
L100	1-469-524-91	INDUCTOR 4.7UH (NLFV25)	
L101	1-469-524-91	INDUCTOR 4.7UH (NLFV25)	
L102	1-414-394-41	INDUCTOR (SMD) 2.2UH	
		<COIL>	
LF001	1-416-405-21	FILTER, CHIP EMI (COMMON MODE)	
		<LINK>	
⚠ PS001	1-533-915-41	RINK, CHIP IC	
⚠ PS002	1-533-282-21	RINK, IC	
⚠ PS003	1-576-282-21	RINK, SQUARE CHIP TYPE IC	
		<TRANSISTOR>	
Q100	8-729-031-35	TRANSISTOR 2SK2034-TE85L	
Q101	8-729-103-96	TRANSISTOR 2SB798-T1DL	
Q102	8-729-029-13	TRANSISTOR DTC143ZUA-T106	
Q103	8-729-031-35	TRANSISTOR 2SK2034-TE85L	
Q104	8-729-103-96	TRANSISTOR 2SB798-T1DL	
Q105	8-729-048-50	TRANSISTOR 2SK3018-T106	
Q107	8-729-048-50	TRANSISTOR 2SK3018-T106	
Q111	8-729-048-50	TRANSISTOR 2SK3018-T106	
Q112	8-729-905-38	TRANSISTOR 2SC4081T106R	
Q113	8-729-905-38	TRANSISTOR 2SC4081T106R	
Q700	8-729-029-13	TRANSISTOR DTC143ZUA-T106	
		<RESISTOR>	
R104	1-216-158-91	RES, CHIP 22	(3216)
R105	1-216-158-91	RES, CHIP 22	(3216)
R106	1-216-809-91	RES, CHIP 100	(1608)
R107	1-216-833-91	RES, CHIP 10K	(1608)
R108	1-216-797-91	RES, CHIP 10	(1608)
R109	1-216-809-91	RES, CHIP 100	(1608)
R110	1-216-833-91	RES, CHIP 10K	(1608)
R112	1-216-158-91	RES, CHIP 22	(3216)
R113	1-216-158-91	RES, CHIP 22	(3216)
R114	1-216-797-91	RES, CHIP 10	(1608)
R115	1-218-871-91	RES, CHIP 10K	(1608)
R116	1-218-871-91	RES, CHIP 10K	(1608)
R117	1-218-881-91	RES, CHIP 27K	(1608)
R118	1-218-881-91	RES, CHIP 27K	(1608)
R119	1-218-881-91	RES, CHIP 27K	(1608)
R121	1-218-890-91	RES, CHIP 62K	(1608)
R125	1-218-881-91	RES, CHIP 27K	(1608)
R126	1-218-889-91	RES, CHIP 56K	(1608)
R130	1-218-873-91	RES, CHIP 12K	(1608)
R131	1-216-864-91	CONDUCTOR, CHIP	(1608)
R132	1-216-864-91	CONDUCTOR, CHIP	(1608)
R133	1-216-864-91	CONDUCTOR, CHIP	(1608)
R134	1-216-864-91	CONDUCTOR, CHIP	(1608)
R145	1-216-864-91	CONDUCTOR, CHIP	(1608)
R146	1-216-864-91	CONDUCTOR, CHIP	(1608)
R147	1-216-864-91	CONDUCTOR, CHIP	(1608)
R148	1-216-864-91	CONDUCTOR, CHIP	(1608)
R150	1-216-864-91	CONDUCTOR, CHIP	(1608)
R151	1-216-802-91	RES, CHIP 27	(1608)

Ref.	Part No.	Description	
R152	1-216-816-91	RES, CHIP 390	(1608)
R153	1-216-810-91	RES, CHIP 120	(1608)
R155	1-216-864-91	CONDUCTOR, CHIP	(1608)
R401	1-216-025-91	RES, CHIP 100	(2012)
R402	1-216-025-91	RES, CHIP 100	(2012)
R403	1-216-025-91	RES, CHIP 100	(2012)
R404	1-216-025-91	RES, CHIP 100	(2012)
R405	1-216-025-91	RES, CHIP 100	(2012)
R406	1-216-025-91	RES, CHIP 100	(2012)
R407	1-216-025-91	RES, CHIP 100	(2012)
R408	1-216-025-91	RES, CHIP 100	(2012)
R610	1-216-849-91	RES, CHIP 220K	(1608)
R611	1-216-849-91	RES, CHIP 220K	(1608)
R612	1-218-896-91	RES, CHIP 110K	(1608)
R618	1-216-845-91	RES, CHIP 100K	(1608)
R621	1-216-839-91	RES, CHIP 33K	(1608)
R628	1-216-844-91	RES, CHIP 82K	(1608)
R629	1-216-828-91	RES, CHIP 3.9K	(1608)
R751	1-216-815-91	RES, CHIP 330	(1608)
R752	1-216-810-91	RES, CHIP 120	(1608)
R753	1-216-298-91	RES, CHIP 2.2	(2012)
R754	1-216-298-91	RES, CHIP 2.2	(2012)
R755	1-216-298-91	RES, CHIP 2.2	(2012)
R756	1-216-298-91	RES, CHIP 2.2	(2012)
R777	1-216-845-91	RES, CHIP 100K	(1608)
R782	1-216-864-91	CONDUCTOR, CHIP	(1608)
R785	1-218-887-91	RES, CHIP 47K	(1608)
R787	1-218-892-91	RES, CHIP 75K	(1608)
R788	1-218-887-91	RES, CHIP 47K	(1608)
R791	1-218-892-91	RES, CHIP 75K	(1608)
R792	1-218-899-91	RES, CHIP 150K	(1608)
R793	1-218-899-91	RES, CHIP 150K	(1608)
R794	1-218-899-91	RES, CHIP 150K	(1608)
R795	1-218-899-91	RES, CHIP 150K	(1608)
R796	1-216-864-91	CONDUCTOR, CHIP	(1608)
R797	1-216-864-91	CONDUCTOR, CHIP	(1608)
RB100	1-233-415-21	RES, CHIP NETWORK 10K	(3216)
RB701	1-233-578-21	RES, CHIP NETWORK 47K	
RB702	1-233-578-21	RES, CHIP NETWORK 47K	
RB702	1-233-578-21	RES, CHIP NETWORK 47K	

A-6712-830-A MOUNTED CIRCUIT BOARD, SW-355

PLACE CODE #25SW

Ref.	Part No.	Description	
		<CONNECTOR>	
CN851	1-794-627-21	CONNECTOR, FFC/FPC 7P	
		<DIODE>	
D851	8-719-078-90	DIODE CL-165HR/G1-D-T	
D852	8-719-080-04	DIODE CL-190UB-X-T	
		<TRANSISTOR>	
Q851	8-729-029-14	TRANSISTOR DTC144EUA-T106	
		<RESISTOR>	
R852	1-216-835-91	RES, CHIP 15K	(1608)
R853	1-216-993-91	RES, CHIP 2.4K	(1608)
		<SWITCH>	
S851	1-771-917-21	SWITCH, TACTILE	
S852	1-771-917-21	SWITCH, TACTILE	

Ref.	Part No.	Description	
	ACCESSORY & PACKING		PLACE CODE #23
CC	1-573-291-12	CONNECTOR,CONVERSION	#23 **for SCPH-30003,-30004**
⚠ AC	1-751-115-21	CORD,POWER	#23 **for SCPH-30002**
⚠ AC	1-751-115-21	CORD,POWER	#23 **for SCPH-30003**
⚠ AC	1-575-131-82	CORD,POWER	#23 **for SCPH-30004**
AV	1-792-028-31	AV CABLE	#23
CONT	1-792-238-81	ANALOG CONTROLLER(DUAL SHOCK2)	#23
SR	3-060-494-01	SHEET,PROTECTION	#23
CU	3-064-714-01	CUSHION	#23
PA	3-065-172-01	PAD,TOGETHER PACKING	#23
CA	3-066-440-11	INDIVIDUAL CARTON	#23
MA	3-066-441-11	MASTER CARTON,3SETS	#23
RE	3-066-158-01	CARD (A), OWNER REGISTRATION	#23 **for SCPH-30002**
RE	3-066-159-02	CARD (B), OWNER REGISTRATION	#23 **for SCPH-30003**
RE	3-066-160-02	CARD (C), OWNER REGISTRATION	#23 **for SCPH-30004**
IM	3-066-542-21	MANUAL, INSTRUCTION #23	**for SCPH-30002**
IM	3-066-542-31	MANUAL, INSTRUCTION #23	**for SCPH-30003**
IM	3-066-542-42	MANUAL, INSTRUCTION #23	**for SCPH-30004**
IM	3-066-542-52	MANUAL, INSTRUCTION #23	**for SCPH-30004**
DISC	3-066-725-01	DISK, DEMONSTRATION	#23
SE	3-987-375-02	SEAL, SEAL	#23